Town of Cape Vincent Zoning Law
1989
Amended 1991
Amended 1993
Amended 1998
Amended 2012
Amended 2014
Local Law No. 3, December 19, 2019

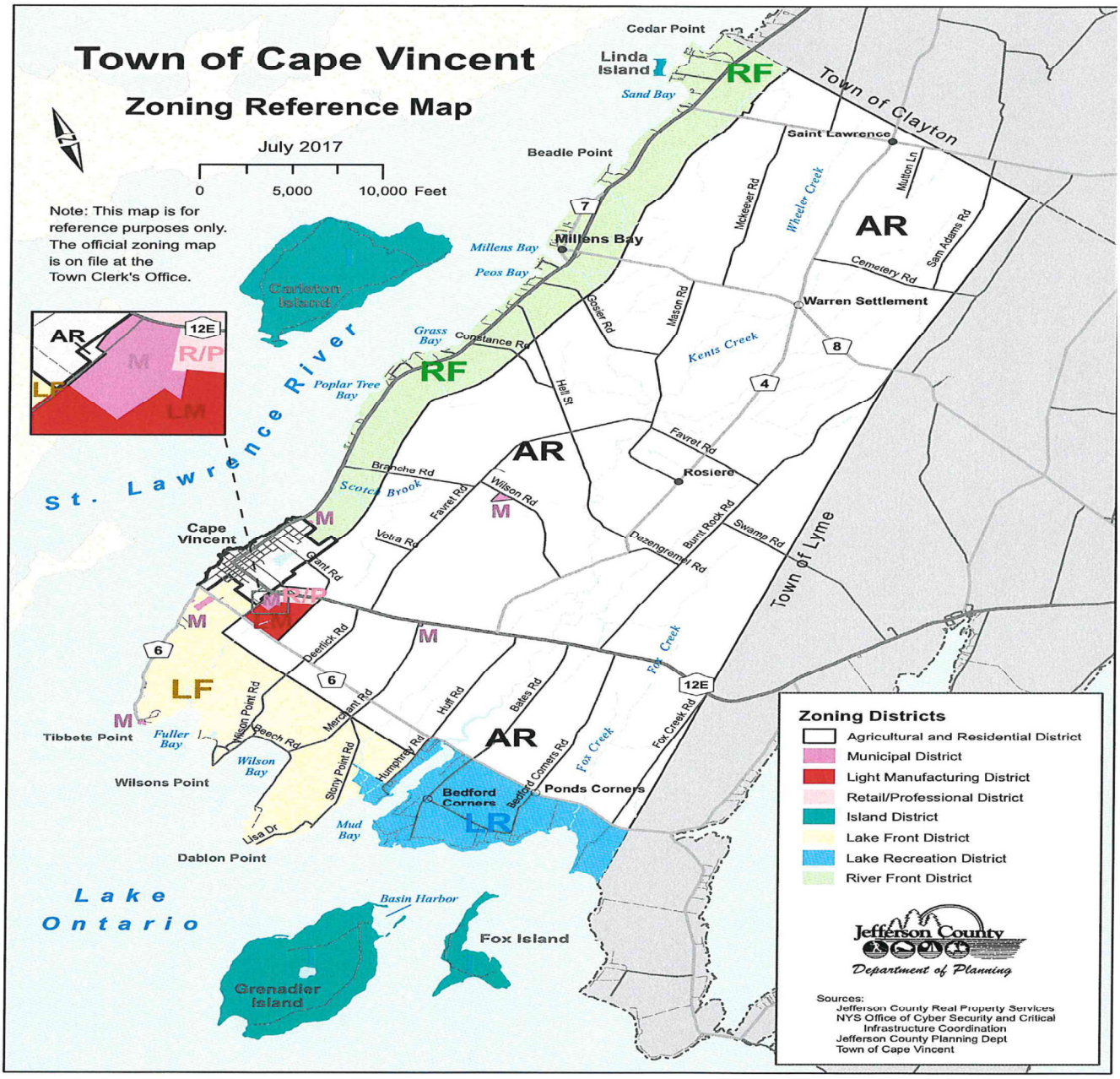

Town Of Cape Vincent Zoning Law

Table of Contents

1. INTRODUCTION

1.1 Enacting Clause 1
1.2 Title 1
1.3 Purpose 1
1.4 State Environmental Quality Review (SEQR) 2
1.5 Unique Features 2
1.6 Enacting Date 2
1.7 Periodic Review 2
1.8 Separability 2
1.9 New York State Certified Agricultural District 2

2. ESTABLISHMENT OF ZONING DISTRICTS

2.1 Districts 3
2.2 Adoption of Town of Cape Vincent Zoning Map 3
2.3 Interpretation of Zoning District Boundaries 3

3. DISTRICT REGULATIONS

3.1 Lake Front District (LF) 4
3.2 Lake Recreation District (LR) 5
3.3 River Front District (RF) 6
3.4 Agricultural Residential District (AR) 7
3.5 Light Manufacturing District (LM) 8
3.6 Retail/Professional District (RP) 8
3.7 Islands District (I) 9
3.8 Municipal District (M) 10

4. LOT USES

4.1 Use Per Lot 11
4.2 District Uses (Table No. 8) 11-13
4.3 Prohibited Uses 13

5. ADMINISTRATION AND ENFORCEMENT

5.1 Zoning Permits 13
5.2 Zoning Enforcement Officer 15
5.3 Zoning Board of Appeals 16
Use Variance 16
Area Variance 17
Special Use Permit 18
5.4 Planning Board 22
Site Plan Review 24
5.5 County Planning Board 30
5.6 Certificate of Zoning Compliance 30
5.7 Application Fees and Review Costs 31
5.8 Violations and Penalties 31

5.9 Interpretation 32

6. GENERAL ZONING REGULATIONS

6.1 Air Pollution 32
6.2 Drainage 32
6.3 Electromagnetic Frequency or Radiation Interference 33
6.4 Erosion and Sedimentation Control 33
6.5 Fences 33
6.6 Fire and Explosive Hazard 34
6.7 Noise 34
6.8 Odor 38
6.9 Outdoor Lighting 38
6.10 Outdoor Storage 39
6.11 Parking Requirements 39
6.12 Property Safety 41
6.13 Radiation Hazard 42
6.14 Restoration of Land 42
6.15 Screening 42
6.16 Signs 43
6.17 Traffic 44
6.18 Road Conditions 44
6.19 Vibration 44

7. SUPPLEMENTAL REGULATIONS

7.1 Adult Entertainment/Adult Use 45
7.2 Automotive Service/Repair Stations 45
7.3 Boathouses and Covered Docks 46
7.4 Commercial 46
7.5 Home Occupations 46
7.6 Mining Operations 47
7.7 Manufactured (Mobile) Homes 47
I. Mobile Home Specifications..... 47
II. Manufactured (Mobile) Home Parks (General Specifications) 48
III. Seasonal Home Parks..... 52
IV. Manufactured (Mobile) Home Parks (Year Round) 53
7.8 Modular Homes 54
7.9 Marinas 54
7.10 Seasonal Recreational Resorts 55
7.11 Recreational Vehicles 56
7.12 Rental Dwelling Units 57
7.13 Solar Energy Conversion System – SECS 57
7.14 Tall Structure Applications 65
7.14.5 Elevated Water Storage and Pressure Regulation Facilities (EWSPR).... 68
7.14.6 Telecommunication Towers (No Rotating Parts) 69
7.14.7 Meteorological Towers 71
7.14.8 Wind Energy Conversion Systems (WECS) 72
7.14.9 Small Wind Energy Conversion Systems (SWECS) 80
7.15 Veterinary Practice and Kennels 82

8. NON-CONFORMITIES 82

9. DEFINITIONS 84

10. APPENDIX 96

No. 1- Zoning Map..... 96

No. 2- Zoning Permit Instructions to Applicant..... 97

No. 3- Zoning Permit Application Form 98

No. 4- Short EAF 99

No. 5- Basic Site Plan Review Procedure 103

No. 6- SEQR Flow Chart 104

No. 7- Stop Work Order 105

No. 8- Notice of Violation 106

No. 9- Large Scale WECS Exclusion Map 107

No. 10- Site Plan Review Application Form..... 108

No. 11- Sample Illustrative Site Plan or Site Plan Review Drawing 111

Town of Cape Vincent Zoning Law

1. INTRODUCTION

1.1 Enacting Clause:

Pursuant to the laws of the State of New York (Article 16 -Town Law and Municipal Home Rule Law - Section 10) to protect and promote the health, safety, and welfare of the community, the Town Board of the Town of Cape Vincent, NY, hereby enacts this Law. This Law is prescribed to implement "A Joint Comprehensive Plan for the Village and Town of Cape Vincent," as may be amended by the Town of Cape Vincent (Town).

The Village of Cape Vincent is not included in this Law. The zoning requirements of the Village are controlled by the most recent version of the "Village of Cape Vincent Zoning Law." This law may be obtained through the Village office.

1.2 Title:

This Law shall be known and may be cited as the "Town of Cape Vincent Zoning Law" (Law).

1.3 Purpose:

This Law, in conjunction with "A Joint Comprehensive Plan for the Village and Town of Cape Vincent," (the "Plan") is designed to protect the health, welfare, and safety of the Town's citizens while encouraging growth through the logical, orderly development of the land within the Town, while maintaining the character of the Town and long-term growth objectives as laid out in the Plan.

It is intended that this will be accomplished through the following actions:

1. All Members of the Boards created by this Law and the Zoning Enforcement Officer, whose position is also created by this Law shall abide by the Code of Ethics for the Town of Cape Vincent and as may be adopted and/or revised by the Town Board.

2. This Law supersedes all commercial, industrial, and private agreements affecting any aspect of this Law, except as specified in this Law.

3. Maintain/update Land Use Regulations based upon experience derived from previous versions of the Law. To promote and encourage future development in the Town that will not adversely affect either the health, welfare, or wellbeing of its residents or adversely impact the lands in the Town and their natural resources.

4. Provide a flexible system of land-use regulation that enables the Town to grow while preserving its unique features, natural resources, natural character, historical sites, agricultural importance, rural character, destination for vacationers and seasonal residents, tourism, and recreation.

5. Minimize the adverse environmental impacts of development, especially in visually and environmentally sensitive areas such as scenic view sheds, stream

corridors, waterfronts, wetlands, floodplains and active farmlands. (Section 1.5, "Unique Features")

6. Ensure adequate services to Town residents, inclusive of transportation, water, sewage systems, schools, fire, police, and other facilities.

7. Preserve and enhance real property values and protect private property rights and enjoyment of landowners.

8. Regulate commercial, industrial, and other non-residential uses in a manner that is sensitive to the community and provide freedom for economic use of the land, provided that such uses are not harmful to neighboring property values, health, welfare and safety of the residents.

9. Provide a variety of housing opportunities in an effort to encourage affordable housing.

10. Protect residences from nuisances, odors, noise, light pollution, and other unsightly obtrusive and offensive land uses and activities.

11. Encourage the use of alternative energy systems that are not in conflict with any of the other purposes stated in Section1.3, "Purpose."

1.4 SEQR (State Environmental Quality Review)
The Town of Cape Vincent shall be an involved agency in all aspects of the SEQR process.

1.5 Unique Features:
The Town of Cape Vincent possesses unique features that require special consideration when applying land-use regulations. See "A Joint Comprehensive Plan for the Village and Town of Cape Vincent" (the "Plan") when applying this Law.

1.6 Enacting Date:
Law shall be enacted upon filing with the Secretary of State.

1.7 Periodic Review:
This Law is intended to reflect the general intent and spirit of the Plan at any given time. Similarly, it should be reviewed no less frequently than every five years to reflect warranted changes over time. This does not preclude adding an amendment to the Law as may be determined by the Town Board.

1.8 Separability:
Should any Section or provision of this Law be decided by the courts to be unconstitutional or invalid, such decision shall not affect the validity of the Law as a whole or any part thereof other than the part so decided to be unconstitutional or invalid.

1.9 New York State Certified Agricultural District:
This Law recognizes that farm operations as defined in NYS Agriculture and Markets Law §301, subdivision 11, authorizes certain benefits to farm operations that are registered certified agricultural, Jefferson County's North Agricultural

District No. 2. However, landowners within certified agricultural districts are not exempted from provisions of this Law for non-farm operations.

2. ESTABLISHMENT OF ZONING DISTRICTS

2.1 Districts:

2.1.1 Lake Front (LF)
2.1.2 Lake Recreation (LR)
2.1.3 River Front (RF)
2.1.4 Agricultural Residential (AR)
2.1.5 Light Manufacturing (LM)
2.1.6 Retail/Professional (RP)
2.1.7 Islands (I)
2.1.8 Municipal (M)

2.2. Adoption of Town of Cape Vincent Zoning Map:

The boundaries of each district established by this Law are delineated by the map entitled, "Zoning Map, Town of Cape Vincent, New York," dated with the effective date of this Law and filed with the Town Clerk. The Map may use the district abbreviations as shown in Section 2.1, "Districts." This map is hereby adopted and declared to be part of this Law. (Appendix 1, Zoning Map.)

2.3. Interpretation of Zoning District Boundaries:

Where uncertainties exist as to the boundaries of districts shown on the zoning map, the following rules apply:

1. Boundaries on streets and roads shall be construed to follow the center line of state, county, and municipal streets and roads.

2. Boundaries along lot lines shall be construed to follow the lot lines.

3. Boundaries indicated to follow shorelines of streams, river fronts and lake fronts shall be construed to follow the natural occurring mean high-water elevation of 247.30 feet above sea level as determined by US Army Corps of Engineers based on 1985 International Great Lakes Datum. For purposes of this Law, artificially constructed harbors, docks, and boat slips are not naturally occurring.

4. Where a zoning district boundary splits a lot of record, each portion of the lot shall be controlled by the regulations of the district in which it resides

5. Where uncertainty exists with respect to the exact location of the boundary of a district as shown on the map, the Town Zoning Enforcement Officer shall determine said boundary.

3. DISTRICT REGULATIONS

3.1 Lake Front District (LF)

1. Intent:
   The Town recognizes that one of its most valuable, natural, and developed resources is its waterfront along Lake Ontario and the mouth of the Saint Lawrence River. To protect this land from development, other than residential, to promote and attract more high-quality residential development, and to preserve the natural and scenic environment in these areas, the Town has established a Lake Front District.

2. Lot Requirements: **(Table No.1)**

Table 1	**Area Minimum**	**Frontage Minimum**	**Setbacks Minimum**			**Height Maximum**	**Open Space Minimum**
USE			Front	Side	Rear		
Permitted	3/4 Acre	100′	40′	15′	25′	35′	35%
Pre-Existing, non-conforming	Less than ¾ acre	Less than 100′	40′	10′	25′	35	35%
Multi-family	½ Acre/Unit	200′	40′	50′	25′	35′	35%
Other Site Plan	One (1) Acre	100′	40′	25′	25′	35′	35%

3. Waterfront Lot:
   Any waterfront lot must have a minimum of 100′ of water frontage and 100′ of rear lot width and deeded or Home Owners' Association access to be considered a buildable lot.

4. Lot Utilization Area:
   This area, bounded by the setback lines, is the only area on a lot that may be built upon. All use requirements, such as lighting etc., are measured/ confirmed at the boundary of this area.

5. Lot Exclusion Area:
   This area between the lot lines and the setback lines is reserved for green space, such as lawn, landscaping and screening, and ingress and egress driveways. No structures or commercial parking are permitted within this area.

6. Lot Uses:
   The allowable uses for lots in the Lake Front District are shown in Table 8.

7. Setbacks are measured on a horizontal line from the edge of road right-of-way and/or property line as appropriate. For private roads, the measurement shall be to the edge of the roadway.

3.2 Lake Recreation District (LR)

1. Intent:
   The area from Mud Bay south to the Town line is occupied by existing marinas, campgrounds, manufactured (mobile) home parks, residential structures of all types, a restaurant, and safe harbors for fishing and boating enthusiasts. The Town recognizes the need for a district along the lake front for recreational, commercial, and various types of residential uses with less development restrictions than the remainder of the lake front. The shorelines of this area are nearly 100 percent developed. The number of dwelling units, lot sizes, manufactured (mobile) home parks, and commercial development is of concern due to the shallow waters and shallow soils. Therefore, in addition to permitted uses, Site Plan Review and Special Use Permit uses have been established to ensure that any further development or redevelopment in this District will not cause undesirable environmental impacts.

2. Lot Requirements: (**Table No. 2)**

Table 2	**Area Minimum**	**Frontage Minimum**	**Setbacks Minimum**			**Height Maximum**	**Open Space Minimum**
USE			Front	Side	Rear		
Permitted	3/4 Acre	100′	40′	15′	25′	35′	35%
Pre-Existing, non-conforming	Less than ¾ acre	Less than100′	40′	10′	25′	35	35%
Multi-family	½ Acre/Unit	200′	40′	50′	25′	35′	35%
Commercial	One (1) Acre	200′	40′	50′	25′	35′	35%
Other Site Plan	One (1) Acre	100′	40′	25′	25′	35′	35%

3. Waterfront Lot:
   Any waterfront lot must have a minimum of 100′ of water frontage and 100′ of rear lot width and deeded or Home Owners′ Association access to be considered a buildable lot.

4. Lot Utilization Area:
   The area, bounded by the setback lines, is the only area on a lot that may be built upon. All use requirements, such as lighting etc., are measured/ confirmed at the boundary of this area.

5. Lot Exclusion Area:
   The area between the lot lines and the setback lines is reserved for green space, such as lawn, landscaping and screening, and ingress and egress driveways. No structures or commercial parking are permitted within this area.

6. Lot Uses:
   The allowable uses for lots in the Lake Recreational are shown in Table 8.

7. Setbacks are measured on a horizontal line from the edge of road right-of-way and/or property line as appropriate. For private roads, the measurement shall be to the edge of the roadway.

3.3 River Front District (RF)

1. Intent:
   The Town recognizes that New York State Route12E along the St. Lawrence River is a major route in the Town and is designated as a scenic byway (Seaway Trail) and provides immediate visual and physical access to the river front. The Town wishes to provide opportunities for both commercial and residential development in this district; however, commercial development must be of high-quality design and is, therefore, subject to Site Plan Review procedures. Any residential development should have a permanent year around appearance along this major tourist route. Manufactured (mobile) homes will be provided for in manufactured (mobile) home parks, which will be controlled through Site Plan Review procedures.

   The River District consists of all properties on the river side of Rte. 12E (North) and follows the natural occurring mean high-water elevation of 247.3 feet above sea level as determined by the Army Corps of Engineers based on 1985 International Great Lakes Datum. The district also extends inland from Rte. 12E (South) 1000 feet.

2. Lot Requirements: (**Table No. 3)**

Table 3	**Area Minimum**	**Frontage Minimum**	**Setbacks Minimum**			**Height Maximum**	**Open Space Minimum**
USE			Front	Side	Rear		
Permitted	3/4 Acre	100′	40′	15′	25′	35′	35%
Pre-Existing, non-conforming	Less than ¾ acre	Less than100′	40′	10′	25′	35	35%
Multi-family	½ Acre/Unit	200′	40′	50′	25′	35′	35%
Commercial	One (1) Acre	300′	40′	50′	25′	35′	35%
Other Site Plan	One (1) Acre	100′	40′	25′	25′	35′	35%

3. Waterfront Lot:
   Any waterfront lot must have a minimum of 100′ of water frontage and 100′ of rear lot width and deeded or Home Owners' Association access to be considered a buildable lot.

4. Lot Utilization Area:
   The area, bounded by the setback lines, is the only area on a lot that may be built upon. All use requirements, such as lighting etc., are measured/ confirmed at the boundary of this area.

5. Lot Exclusion Area:
   The area between the lot lines and the setback lines is reserved for green space, such as lawn, landscaping and screening, and ingress and egress driveways only. No structures or commercial parking are permitted within this area.

6. Lot Uses:

The allowable uses for lots in the River Front District are shown in Table 8.

7. Setbacks are measured on a horizontal line from the edge of road right-of-way and/or property line as appropriate. For private roads, the measurement shall be to the edge of the roadway.

3.4 Agricultural Residential District (AR)

1. Intent:
The large, open spaces in the central area of the Town are primarily used for agriculture of various types, rural residential, and several non-agricultural businesses. This area lends itself to various types of future development. The Town wishes to promote active farming and other development in this area that preserves the District's rural character.

2. Lot Requirements: (**Table No. 4)**

Table 4	**Area Minimum**	**Frontage Minimum**	**Setbacks Minimum**			**Height Maximum**	**Open Space Minimum**
USE			Front	Side	Rear		
Permitted	3/4 Acre	100′	40′	15′	25′	35′	35%
Pre-Existing, non-conforming	Less than ¾ acre	Less than100′	40′	10′	25′	35	35%
Multi-family	½ Acre/Unit	200′	40′	50′	25′	35′	35%
Commercial	One (1) Acre	300′	40′	75′	25′	35′	35%
Other Site Plan	One (1) Acre	200′	40′	50′	25′	35′	35%

3. Waterfront Lot:
Any waterfront lot must have a minimum of 100′ of water frontage and 100′ of rear lot width and deeded or Home Owners' Association access to be considered a buildable lot.

4. Lot Utilization Area:
This area, bounded by the setback lines, is the only area on a lot that may be built upon. All use requirements, such as lighting etc., are measured/ confirmed at the boundary of this area.

5. Lot Exclusion Area:
This area between the lot lines and the setback lines is reserved for green space, such as lawn, landscaping and screening, and ingress and egress driveways only. No structures or commercial parking are permitted within this area.

6. Lot Uses:
Allowable uses for lots in the Agricultural Residential Dist. are in Table 8.

7. Setbacks are measured on a horizontal line from the edge of road right-of-way and/or property line as appropriate. For private roads, the measurement shall be to the edge of the roadway.

3.5 Light Manufacturing District (LM)

1. Intent:
The Town recognizes a need to attract business that would create a high number of jobs relative to the amount of space needed for development. Examples of light manufacturing businesses are similar to those in industrial parks that exist in Jefferson County and the City of Watertown, NY. The location of this District is convenient to transportation routes, municipal water, and three-phase power. Therefore, the permitted uses in this District are more extensive than those in other districts resulting in a more efficient permitting process.

2. Lot Requirements: (**Table No. 5)**

Table 5	**Area Minimum**	**Frontage Minimum**	**Setbacks Minimum**			**Height Maximum**	**Open Space Minimum**
USE			Front	Side	Rear		
Permitted	Two (2) Acres	250′	50′	50′	50′	35′	35%
Special Permit	One (1) Acre	100′	50′	25′	50′	35′	35%

3. Heights:
Heights in excess of 35 feet in the Light Manufacturing District require an area variance.

4. Lot Utilization Area:
This area, bounded by the setback lines, is the only area on a lot that may be built upon. All use requirements, such as lighting etc., are measured/ confirmed at the boundary of this area.

5. Lot Exclusion Area:
This area between the lot lines and the setback lines is reserved for green space, such as lawn, landscaping and screening and ingress and egress driveways only. No structures or commercial parking are permitted within this area.

6. Lot Uses:
Allowable uses for lots in the Light Manufacturing District are in Table 8.

7. Setbacks are measured on a horizontal line from the edge of road right-of-way and/or property line as appropriate. For private roads, the measurement shall be to the edge of the roadway.

3.6 Retail/Professional District (RP)

1. Intent:
The Town recognizes the potential for retail/professional development from the Village line south along New York State Route 12E and a need to enable development without negatively impacting scenic views. New

York State Route 12E is a designated scenic byway (Seaway Trail), portions of which provide visual and physical access to the Saint Lawrence River. The Retail/Professional regulations will allow development without significantly impacting the scenic byway.

2. Lot Requirements: (**Table No. 6)**

Table 6	**Area Minimum**	**Frontage Minimum**	**Setbacks Minimum**			**Height Maximum**	**Open Space Minimum**
USE			Front	Side	Rear		
Retail/Professional	Two (2) Acres	300′	75′	75′	75′	35′	35%

3. Lot Utilization Area:
This area, bounded by the setback lines, is the only area on a lot that may be built upon. All use requirements, such as lighting etc., are measured/ confirmed at the boundary of this area.

4. Lot Exclusion Area:
This area between the lot lines and the setback lines is reserved for green space, such as lawn, landscaping and screening and ingress and egress driveways only. No structures or commercial parking are permitted within this area.

5. Lot Use:
The allowable uses for lots in Retail/Professional are shown in Table 8.

6. Setbacks are measured on a horizontal line from the edge of road right-of-way and/or property line as appropriate. For private roads, the measurement shall be to the edge of the roadway.

3.7 Islands District (I)

1. Intent:
The Islands District consists of five islands within the boundaries of the Town of Cape Vincent. They include Grenadier, Little Grenadier, Fox, Carleton, and Linda Islands. Carleton and Grenadier Islands have historic areas of interest as confirmed by the New York State Office of Parks, Recreation, and Historic Preservation. As such, land use on or near any area of historic interest will be taken into consideration during the approval process. This district represents the most distinctive land-use zone within the Town. Residents of the Islands District have a unique property and living arrangement; one that is both unconventional and independent. Residents do not want or need elaborate infrastructure development. The land-use plan for this District is focused principally on encouraging quality residential development with some capacity for limited, controlled commercial development, for example, restaurant, hotel, bed and breakfast.

2. Lot Requirements: (**Table No. 7 and 7.1)**

Table 7 Islands > 10 acres	**Area Minimum**	**Frontage Minimum**	**Setbacks Minimum**			**Height Maximum**
USE			Front	Side	Rear	
Permitted	Five (5) Acres	300′	200′	50′	50′	35′
Special Use Permit	Five (5) Acres	300′	200′	50′	50′	35′

Table 7.1 Islands ≤ 10 acres	**Setbacks Minimum**			**Height Maximum**
USE	Front	Side		
Permitted	100′	30′		35′

Footnote: Table No. 7: Carlton and Grenadier Islands are composed respectively of 1,792 and 1,290 acres in size.
Table No. 7.1: Linda Island is 7.19 acres in size.

3. Lot Utilization Area:
This area, bounded by the setback lines, is the only area on a lot that may be built upon. All use requirements, such as lighting etc., are measured/confirmed at the boundary of this area.

4 Lot Exclusion Area:
This area between the lot lines and the setback lines is reserved for green space, such as lawn, landscaping and screening, and ingress and egress driveways. No structures or commercial parking are permitted within this area.

5. Lot Uses:
The allowable uses for lots in the Islands District are shown in Table 8.

6. Boathouses:
Boathouses shall be a maximum of one story, 25 feet in height from the mean high-water mark established by the U.S. Army Corp of Engineers.

7. Telecommunications Tower:
Subject to the regulations of the Federal Communications Commission (FCC) the maximum height for a telecommunications tower is 50 feet.

8. Setbacks are measured on a horizontal line from the edge of road right-of-way and/or property line as appropriate. For private roads, the measurement shall be to the edge of the roadway.

3.8 Municipal District:

1. Intent:
Throughout the Town there are properties used for municipal or governmental purposes. In that these properties are located within the

boundaries of established zoning district, the Town recognizes that applicants should be made aware of the location of these properties to eliminate any confusion about land uses on municipal properties. Private development is prohibited in the Municipal District unless under certain unusual and/or unavoidable circumstances development on municipal sites would be in the best interest of the health, safety, and welfare of the Town's residents. In such cases, a variance would be required from the Zoning Board of Appeals.

4. LOT USES

4.1 Use Per Lot:

Only one principal use per lot shall be permitted in all districts. Accessory uses must be compatible with and supportive of the principal use.

4.2 District Uses:

Allowable uses shall be as shown in **Table No 8.**

LF – Lake Front
LR – Lake Recreation
RF – River Front
AR – Agricultural Residential
LM – Light Manufacturing
RP – Retail/Professional
I – Islands
M – Municipal

Table No. 8 – ALLOWABLE USES

(Refer to Text of Law for Detailed Information)

P–Permitted (Permit May Be Required) **S**–Site Plan Review **SU**–Special Use Permit
X–Not Allowed *__SFR__-State and Federal Regulations and Cape Vincent Zoning Law
** except Linda Island which is not allowed

DISTRICT	**LF**	**LR**	**RF**	**AR**	**LM**	**RP**	**I**	**M**
Adult Use	X	X	X	X	SU	X	X	X
Agricultural/Non-Certified	S	S	S	P	S	S	P	X
Agricultural/NYS Certified District	P	P	P	P	P	P	P	X
Animal (Concentrated) Feed Lot	X	X	X	S	X	X	X	X
Automobile Service/Repair/Sales	X	X	SU	SU	SU	SU	X	X
Bar/Tavern	X	S	S	S	S	S	SU	X
Bed and Breakfast	S	S	S	S	X	S	SU	X
Boathouse - **SFR**	*	*	*	*	*	*	*	*
Cabins	P	P	P	P	X	X	P	X
Cemetery	S	S	S	S	X	X	S	X
Commercial	X	S	S	S	S	S	SU	X
Correctional/Detention Facility	X	X	X	S	X	X	X	X
Daycare Facility (Adult or Child)	S	S	S	S	X	S	SU	X
Dock (Covered) - SFR	*	*	*	*	*	*	*	*
Education Facility	X	SU	SU	S	S	S	SU	X

Electrical Power Transmission Tower	SU	SU	SU	SU	SU	SU	SU	X
DISTRICT	**LF**	**LR**	**RF**	**AR**	**LM**	**RP**	**I**	**M**
Elevated Water Storage and Pressure Regulation Facilities (EWSPRF)	X	X	X	S	S	X	X	P
Commercial Animal Slaughtering/Rendering	X	X	X	SU	SU	SU	X	X
Government Facility	S	S	S	S	S	S	S	P
Healthcare Facility	S	S	S	S	S	S	X	X
Home Occupation	P	P	P	P	P	P	P	X
Hostel	S	S	S	S	X	X	SU	X
Hotel/Motel/ Rental Dwelling Unit	X	S	S	S	X	SU	SU	X
Kennel	X	X	X	S	X	X	X	X
Manufactured Homes (Mobile)	X	P	P	P	X	X	X	X
Seasonal Home Park (Manufactured Homes/Cabins)	X	X	X	S	X	X	X	X
Existing Seasonal Home Park (Manufactured code compliant cabins)	S	S	S	S	X	X	X	X
Manufactured (Mobile) Home Park (Permanent)	X	X	X	S	X	X	X	X
Manufacturing – Light	X	X	X	S	S	X	X	X
Marina	X	SU	SU	X	X	X	X	X
Meteorological Tower	X	X	X	S	X	X	X	X
Mining/Quarry Operation	X	X	X	SU	X	X	X	X
Modular Home	P	P	P	P	P	X	P	X
Multi-Family/Household Dwelling	S	S	S	S	X	S	SU	X
Nursery	X	X	S	P	X	S	X	X
Office – General	X	X	P	P	P	S	X	S
Recreational Resort	X	SU	SU	SU	X	X	SU	X
Recreational Vehicles	X	P	P	P	X	X	X	X
Recreational Vehicle(s) & Watercraft Storage Facility	X	SU	SU	SU	SU	X	X	X
Religious Use	S	S	S	S	X	S	S	X
Residential Garage	P	P	P	P	P	P	P	X
Restaurant/Inn	X	S	S	S	S	S	SU	X
Retail	X	S	S	S	S	S	SU	X
Salvage/Scrap Yard	X	X	X	S	SU	X	X	X
SECS Tier 1 Residential	S	S	S	S	S	S	S	X
SECS Tier 2 Residential	S	S	S	S	S	S	S	X
SECS Tier 3A $\leq$25 KW but >25 MW	X	X	X	S	X	X	X	X
SECS Tier 3B $\leq$25MW	X	X	X	S	SU	X	X	SU
Self-Storage Facility	X	X	X	S	S	S	X	X
Single-Family/Household Dwelling	P	P	P	P	P	X	P	X
Storage Shed	P	P	P	P	P	P	P	X
Telecommunication Tower(s)	X	X	X	S	S	X	SU	X
Utility	SU	SU	SU	SU	SU	SU	SU	X
Veterinary Practice	X	S	S	S	X	S	X	X
WECS – Industrial > 60kw	X	X	X	SU	X	X	X	X
SWECS –Agricultural/Commercial	X	X	X	S	X	X	SU	X

> 10 to ≤ 60kw								
DISTRICT	**LF**	**LR**	**RF**	**AR**	**LM**	**RP**	**I**	**M**
SWECS – Residential ≤ 10kw	SU	SU	SU	S	SU	SU	SU **	X
Workshop/Studio Building	P	P	P	P	P	P	P	X

4.3 Prohibited Uses:

In order to protect the scenic beauty of the Town and the safety, health, and welfare of its residents, the following uses are prohibited:

1. Water-based, floating uses such as, but not limited to, casinos and/or floating domiciles. This does not include yachts or houseboats moored in established public or commercial marinas.

2. The manufacture and storage of hazardous materials in commercially saleable quantities is prohibited. The classes of materials prohibited are but not limited to:

   a. Manufacture of explosives, including fireworks.

   b. Manufacture of pyrophoric powder metals.

   c. Manufacture of toxic gases, such as acetylene, ammonia, chlorine.

   d. Manufacture or storage of corrosive and toxic chemicals in commercial saleable quantities. This category includes but is not limited to: strong acids (sulfuric, nitric, hydrochloric, hydrofluoric, etc.), bases (caustic soda, etc.)

   e. Landfills, dumps and trash/refuse incinerators are prohibited unless leased, owned, or operated by the Town or operated pursuant to license or other agreement with the Town.

   f. Reclamation and treatment of industrial waste.

   g. Exploration and extraction of gaseous and liquid hydrocarbons. This includes, but is not limited to, hydraulic fracturing or current state-of-the-art extraction processes.

   h. Junkyards.

5. ADMINISTRATION AND ENFORCEMENT

5.1 Zoning Permits:

1. Intent:
   Permits are required to ensure that the Zoning Laws are followed for the health, safety, and welfare of the residents of the Town.

2. No building or structure shall be erected, enlarged, or land use initiated until a Zoning Permit and required county, state, and/or federal permits have been issued. The exterior structure area of a building shall not be enlarged until a Zoning Permit has been issued.

3. Zoning Permit applications may be obtained from the Town Clerk or the Zoning Enforcement Officer. (Appendix 3, Zoning Permit Application.) By requesting a permit, the applicant grants members of the Town's Zoning Board of Appeals, Planning Board, and the Zoning Enforcement Office permission to go on their property.

4. A Zoning Permit shall not be required for:

   a. Interior structural alterations.

   b. Routine maintenance and improvements where the exterior dimensions of the structure are not changed. Examples include: new roof, window replacement, siding replacement, etc.

   c. Chimneys, placements of posts, and similar ancillary uses.

5. When measuring to establish proper siting within the lot utilization area, the extremities of the structures shall be used. This includes cornices, eves, overhangs, carports, garages, decks, porches, etc.

6. No Zoning Permit or Certificate of Zoning Compliance shall be issued for any project that is not in compliance with the provisions of this Law.

7. A Zoning Permit shall expire 12 months from the date of issue unless substantial progress has been made toward carrying out the terms of the Zoning Permit. The applicant shall have two years to complete the terms of the Zoning Permit or all work shall cease at the site. An extension may be allowed by the Zoning Enforcement Officer upon proof of necessity submitted by the applicant due to conditions unusual or beyond the control of the applicant.

8. Applications for Zoning Permits shall be submitted to the Zoning Enforcement Officer or the Town Clerk and shall include two (2) copies of a drawing (layout or lot plan) showing the lot to be built upon, Lot Utilization Area, and the size and location within the Lot Utilization Area of the current and proposed structures. The drawing shall be to scale, neat, legible, and shall include actual dimensions, right-of-ways, streams, power lines, and other unique features of the lot.

   In addition, the applicant shall stake the corners of the project and indicate the distance to the nearest property line. This information together with a completed Zoning Permit Application shall be forwarded to the Zoning Enforcement Officer.

9. Temporary Permits:

   a. Intent: The Town recognizes a need to enable short-term uses that do not conform to this Law such as but not limited to:

temporary field construction offices, construction material storage structures, construction material lay-down areas, or shelter needs resulting from emergencies. Applicants should not expect repeated renewal of temporary permits unless it can be proved that the need could not have been avoided.

b. Temporary Permits may be issued by the Zoning Enforcement Officer, upon approval by the Planning Board for a period not to exceed six months, for conforming and nonconforming uses. Such Temporary Permits are conditioned upon agreement by the owner or operator to remove the nonconforming structures or equipment upon expiration of the Temporary Permit or to bring the use into compliance by the specified time. Temporary Permits may be renewed upon approval of the Planning Board.

5.2 Zoning Enforcement Officer:

1. This Law shall be enforced by the Zoning Enforcement Officer, who shall be hired by the Town Board.

2. The Zoning Enforcement Officer shall be the initial point of contact for all zoning matters and the Officer's authorities shall include but are not limited to:

   a. Approve, reissue, and/or deny zoning permits.

   b. Issue and/or withhold Certificates of Zoning Compliance.

   c. Revocation of a Zoning Permit where there is false, misleading, or missing information.

   d. Revocation of a Certificate of Zoning Compliance when the worked performed was not as specified or proposed in the Zoning Permit.

   e. The Zoning Enforcement Officer shall be responsible for enforcement pursuant to Section 5.8, Violations and Penalties, of this Law.

   f. Ensure that the appropriate zoning permits have been issued within the Town of Cape Vincent.

   g. By requesting a permit, the applicant grants Town officials to go on their property.

   h. The Zoning Enforcement Officer shall submit a report with the number of Zoning Permits and Certificates of Zoning Compliance issued, fees collected, and complaints received at each regular Town Board Meeting.

   i. The Zoning Enforcement Officer shall attend all Zoning Board of Appeals meetings and, when requested, Planning Board meetings.

j. A complaint resulting from an action by the Zoning Enforcement Officer should be submitted to the Town Board in writing.

3. Instructions to Applicant: Appendix 2, Instructions to Applicant, as prescribed from time to time by the Town Board and/or the Planning Board.

5.3 Zoning Board of Appeals:

1. Creation, appointment, and organization:
The Zoning Board of Appeals (ZBA) shall consist of five (5) regular members and two (2) alternate members. The Town Board shall appoint the members of the ZBA on a staggered basis in conformance with the Town Law. The Town Board shall appoint the Chair. In the absence of a Town Board decision, the Zoning Board of Appeals shall elect a Chair. The ZBA shall establish and abide by By-laws.

2. Powers and Duties:
The Zoning Board of Appeals shall have all the powers and duties prescribed by Sections 267A and 267B of the Town Law and by this Law.

a. Authority:

Hearing Appeals: Unless otherwise provided by local law or ordinance, the jurisdiction of the Board of Appeals shall be appellate only and shall be limited to hearing and deciding appeals from and reviewing any order, requirements, decision, interpretation, or determination made by the administrative official charged with the enforcement of any ordinance or local law adopted pursuant to this article. The concurring vote of a majority of the members of the Board of Appeals shall be necessary to reverse any order, requirement, decision, or determination of any such administrative official, or to grant a use variance or area variance. Such appeal may be taken by any person aggrieved, or by an officer, department, board, or bureau of the Town.

The Zoning Board of Appeals is empowered to interpret and rule on all requests from elected and appointed Boards of the Town regarding the Zoning Law.

b. Use Variance:

1) Intent:
To authorize a use of the land and/or structure which otherwise would not be allowed or would be prohibited by the terms of the local law.

2) The Zoning Board of Appeals, on appeal from the decision or determination of the Zoning Enforcement Officer, shall have the power to grant Use Variances.

3) No such variance shall be granted by the Zoning Board of appeals without the applicant showing that applicable zoning regulations and restrictions have caused unnecessary hardship. In order to prove such unnecessary hardship, the applicant shall demonstrate to the Zoning Board of Appeals that:

[a] The Applicant cannot realize a reasonable return on his/her investment as demonstrated by competent financial evidence;

[b] That the hardship relating to the property in question is unique and does not apply to a substantial portion of the district or neighborhood;

[c] That the requested Use Variance, if granted, will not alter the essential character of the neighborhood; and

[d] That the hardship has not been self-created.

4) The Zoning Board of Appeals, in granting a Use Variance, shall grant the minimum variance that it shall deem necessary and adequate to address the hardship proven by the applicant, and at the same time preserve and protect the character of the neighborhood and health, safety, and welfare of the community.

c. Area Variance:

1) Intent:
The Zoning Board of Appeals shall have the power, upon an appeal from a decision or determination of the Zoning Enforcement Officer, to grant an Area Variance from the area or dimensional requirement of this Law.

2) In making its determination, the Zoning Board of Appeals shall take into consideration the benefit to the applicant if the variance is granted, as weighed against the detriment to the health, safety, and welfare of the neighborhood or community by granting such variance. In making such a determination, the Board shall also consider:

[a] Whether an undesirable change will be produced in the character of the neighborhood or create a detriment to nearby properties by granting the Area Variance.

[b] Whether the benefit sought by the applicant can be achieved by some other method, feasible for the applicant to pursue, other than an Area Variance.

[c] Whether the requested Area Variance is substantial.

[d] Whether the proposed Area Variance will have an adverse effect or impact on the physical or environmental conditions in the neighborhood or district.

[e] Whether the alleged difficulty was self-created, which consideration shall be relevant to the decision of the Zoning Board of Appeals, but shall not necessarily preclude the granting of the Area Variance.

[f] The location, size, and flow direction of existing sewers, water supply lines and culverts, major electric gas, and telephone lines.

3) The Zoning Board of Appeals, in granting Area Variances, shall grant the minimum variance that it deems necessary and adequate, and at the same time, preserve and protect the character of the neighborhood and the health, safety, and welfare of the community.

d. Imposition of Special Conditions:
The Zoning Board of Appeals shall, in granting any type of variance, have the authority to impose such reasonable conditions and restrictions as are directly related to and incidental to the proposed use of the property, or the period of time such variance shall be in effect. Such conditions shall be consistent with the spirit and intent of this Zoning Law, and shall be imposed for the purpose of minimizing any adverse impact such variance may have on the neighborhood or community.

e. Special Use Permit:

1) Intent:
The intent of the Special Use Permit is to set forth additional requirements which shall apply to certain land uses and activities which, due to their characteristics or the special characteristics of the area in which they are to be located, require special consideration so that they may be properly located and planned with respect to the objectives of this chapter and their effect on the surrounding properties and community character.

2) Compliance:

All applications must comply with the following conditions. Additional requirements for certain uses that require a Special Use Permit are found in Table 8.

3) Purpose of Review:
The primary purpose of Special Use Permit review is to assess the long-term impact of the proposed use on the area and the Town and to ensure compatibility of the use

with the surrounding area and consistency with "A Joint Comprehensive Plan for the Village and Town of Cape Vincent."

4) Special Use Permit Application Procedure:
A Special Use Permit review and approval shall be undertaken by the Zoning Board of Appeals. When the Zoning Board of Appeals approves a Special Use Permit. The Planning Board will then conduct a Site Plan Review. The Planning Board is responsible for all items outlined in the Site Plan Review procedure in this Law (Section 5.4, paragraph 6).

5) Issuance:
The Zoning Board of Appeals shall approve a Special Use Permit if it determines the proposed use will satisfy the standards set forth herein. In approving a Special Use Permit, the Zoning Board of Appeals may require conditions of, and/or modifications to, the project. Such conditions must relate to the impact of the project. If the Zoning Board of Appeals does not make a positive finding in support of the Special Use Permit, it shall deny the Special Use Permit.

6) Standards of Review:
The record of the Zoning Board of Appeals must address the standards outlined below and include the facts and reasons upon which such approval or denial was based:

[a] The proposed use must not be more objectionable to nearby properties by reason of noise, odors, vibration, dust, illumination, or other potential nuisance than the operation of any allowed use in the particular district.

[b] Compatibility of the proposed use with adjoining properties and with the natural and man-made environment. When reviewing business uses, the relationship of the size of the parcel to the intensity of the commercial use and the size of the building shall be a relevant consideration.

[c]) Adequacy of parking, vehicular circulation, and infrastructure for the proposed use, and its accessibility to fire, police, and emergency vehicles.

[d] Restrictions and/or conditions on design of structures or operation of the use, including hours of operation and noise, necessary either to ensure compatibility with the surrounding uses or to protect the natural or scenic resources of the Town.

[e] Compatibility with the traditional or historic character and use of the structure or structures and the traditional or historic character of the site and the surrounding area.

f. Limitations:
A Special Use Permit shall authorize only the particular special use or uses specified therein.

g. Expiration:
A Special Use Permit will expire if the applicant fails to obtain a building permit or fails to comply with the conditions of the Special Use Permit (unless other provisions are set forth by the Planning Board in connection with its approval) within one (1) year after approval.

h. Revocation:
A Special Use Permit will expire if the special use or uses shall cease for any reason for more than 18 consecutive months.

i. Enforcement:
A Special Use Permit may be revoked by the Zoning Enforcement Officer if, after notice to the holder of the permit and an opportunity for hearing, it is determined that the conditions of the Special Use Permit are violated.

Any violation of the conditions of a Special Use Permit or a violation of any applicable performance criteria of this Section shall be deemed a violation of this Law and shall be subject to enforcement action as provided therein.

j. Transferability:
All Special Use Permits shall run with the land and will be transferred to successive property owners provided the permit has not expired and/or it is not revoked for failure to meet the permit conditions.

3. Procedure:

a. Meetings, minutes, records:
Meetings of the Zoning Board of Appeals shall be open to the public to the extent provided in Article 7 of the Public Officers' Law. The Zoning Board of Appeals shall keep minutes of its proceeding showing the vote of each member upon every question, or if absent or failing to vote indicating such fact, and

shall also keep records of its examinations and other official actions.

The original copy of all minutes and records shall be retained in the Town offices. This retention may be either hard copy or electronic. In either case, they shall be held in a secure place and shall be readily accessible to authorized personnel.

b. Filing Requirements:
Every rule, regulation, amendment, or repeal thereof, and every order requirement, decision, or determination of the Zoning Board of Appeals shall be filed in the office of the Town Clerk within five (5) business days of the action.

c. Assistance to the Zoning Board of Appeals:
The Zoning Board of Appeals shall have the authority to call upon any department, agency, or employee of the Town for such assistance as shall be deemed necessary. Subject to budgetary allocations adopted by the Town Board, the Zoning Board of Appeals shall have the power and authority to employ experts, clerks, and a secretary and to pay for their services. The ZBA has the authority to request assistance from any governmental agency outside of Town government.

d. Hearing Appeals:
The concurring vote of a majority of the members of the Zoning Board of Appeals shall be necessary to reverse any order, requirement, decision, or determination of the Zoning Enforcement Officer, or to grant a Use Variance or Area Variance. Such appeal may be taken by any person aggrieved, or by an officer, department, board, or bureau of the Town.

e. Appeal Procedure:
Any appeal shall be taken within sixty-two (62) days after the filing of any order, requirement, decision, interpretation, or determination of the Zoning Enforcement Officer.

A ZBA decision may be appealed to the State Supreme Court pursuant to Article 78 of the CTLR.

f. Stay Upon Appeal:
An appeal shall stay all proceedings in furtherance of an action appealed from, unless the Zoning Enforcement Officer, from whom the appeal is taken, certifies to the Zoning Board of Appeals, after the notice of appeal shall have been filed with the Zoning Enforcement Officer, that by reason of facts stated in the certificate a stay, would, in his or her opinion, cause imminent peril to life or property, in which case proceedings shall not be stayed otherwise that a restraining order which may be granted by the Zoning Board of Appeals or by a court of record on application, on notice to the Zoning Enforcement Officer from whom the appeal is taken and on due cause shown.

g. Hearing an Appeal:
The Zoning Board of Appeals shall hold a public hearing within sixty-two (62) days from the official submission date of the appeal.

h. Notice of Public Hearing:
1) At least five (5) and no more than ten (10) days in advance of the public hearing, the following notifications shall be made:
[a] The Notice of Hearing shall be published in the official newspaper and posted on the Town Office public bulletin board and on the Town's official web site.

[b] The appellant/applicant shall send a notice containing a copy of the public hearing notice, via certified mail to all owners of abutting properties, including properties immediately across the road. The names and addresses of these property owners shall be supplied to the applicant by the secretary of the Zoning Board of Appeals. Proof of certified mailing must be submitted to the Zoning Enforcement Officer.

i. Agency Notifications:
The Town Board, Planning Board, or Zoning Board of Appeals shall refer all amendments, site plans, special use permits, and variances that fall within those areas specified under General Municipal Law, Article 12-B, Section 239m to the County Planning Board prior to the local Boards' vote thereon. This includes actions that fall within five hundred (500) feet of the boundary of the Town, a state or county park or recreation area, a state or county highway or expressway, a state or county owned drainage channel, Agricultural District, and state or county land where a public building or institution is located.

j. Time of Decision:
The Zoning Board of Appeals shall decide upon the appeal within sixty-two (62) days after the hearing has been completed. The time within which the Zoning Board of Appeals must render its decision may be extended by mutual consent of the applicant and the Board.

k. Filing of Decisions and Notices:
The decision of the Zoning Board of Appeals on the appeal shall be filed in the office of the Town Clerk within five (5) business days after the day such decision is rendered, and a copy mailed to the applicant and a copy submitted to the Board chair.

5.4 Planning Board:

1. Creation Appointment and Organization:
   The Planning Board shall consist of five (5) regular members and two (2) alternate members. The Town Board shall appoint the members of the Planning Board on a staggered basis in conformance with the Town Law. The Town Board shall appoint the Chair. In the absence of a Town Board decision, the Planning Board shall elect a Chair. The Planning Board shall establish and abide by By-laws.

2. Powers and Duties:
   The Planning Board shall have the following powers and duties in accordance with Section 5.4.6, Site Plan Review.

   a. Approval or disapproval of the site plans in accordance with Site Plan Review.

   b. Submittal of an advisory opinion to the Town Board for proposed amendments of this Law.

   d. Approval and renewal of temporary permits in accordance with Section 5.1.9, Temporary Permits. Such approval or renewal may be given at a regular meeting of the Planning Board without the requirement for a public hearing.

      The Planning Board recognizes a need to enable short-term uses that do not conform to this Law such as but not limited to: temporary field construction offices, construction material storage structures, construction material lay-down areas, or shelter needs resulting from emergencies. Applicants should not expect repeated renewal of temporary permits unless it can be proved that the need could not have been avoided.

   e. Approval of subdivisions and lot-line adjustments. Refer to separate current version of the Town of Cape Vincent Subdivision Law.

3. Procedure:
   The Planning Board shall act in strict accordance with the procedure specified by this Law. All applications shall be made in writing on forms prescribed by the Town. Every decision of the Planning Board shall be made by resolution which shall contain a full record of the findings in the case.

4. Meetings, minutes, records:
   Meetings of the Planning Board shall be open to the public to the extent provided in Article 7 of the Public Officers' Law. The Planning Board shall keep minutes of its proceedings showing the vote of each member upon every question, or if absent or failing to vote indicating such fact, and shall also keep records of its examinations and other official actions.

The original copy of all minutes and records shall be retained in the Town offices. This retention may be either hard copy or electronic. In either case, they shall be held in a secure place and shall be readily accessible to authorized personnel.

5. Filing of Decisions and Notices:
The decision of the Planning Board on an application shall be filed in the office of the Town Clerk within five (5) business days after the day such decision is rendered, and a copy mailed to the applicant and a copy submitted to the Board chair.

6. **Site Plan Review**:
Intent:
The purpose of the Site Plan Review procedure is to allow the Planning Board to attach safeguards and conditions to those uses which might otherwise produce deleterious effects on the unique features, environment, rural and scenic character of the Town, neighborhood character, or the Town residents' health, safety, and welfare. Furthermore, it is the purpose of the Site Plan Review Procedure to authorize the Planning Board to disapprove a plan for any use, the deleterious effects of which cannot be mitigated because of the particular conditions on the site it is to occupy.

Scope:

a. In addition to the regulations which apply in each district, (Sections 3, 5, 6) Site Plan Review shall also be controlled by the regulations of this Section.

b. No Zoning Permit shall be issued for any Site Plan Review use until the use has been granted Site Plan Review approval by the Planning Board.

c. The Planning Board shall review and approve, approve with conditions, or disapprove Site Plan for all uses described in Section 4, Lot Uses.

Application for Site Plan Review:

a. All application forms and associated fee schedule for Site Plan Review may be obtained from the Town Clerk's office. Completed forms and appropriate fees together with copies of any agreements affecting the use of the subject land shall be submitted to the Planning Board. By requesting an application, the applicant grants Town officials to go on their property.

b. Pre-submission Conference:
A pre-submission conference between the applicant and the Planning Board shall be held to review the proposed development in light of existing conditions and to determine that the information submitted

is in accordance with the guidelines of Section 5.4, Planning Board. A pre-submission conference enables the Planning Board to revise the list of application requirements and review criteria to match the specifics of a given project thus making it easier for the applicant to prepare a plan. The Planning Board has the option of changing or eliminating review criteria that may not be applicable for a given project.

c. Application Requirements:
All of the following as well as additional information requested at the pre-submission conference shall be included in the Site Plan Review application.

1) Completed application form. (Appendix 10, Site Plan Review Application Form and Appendix 11, Sample Site Plan Review Drawing.)

2) Completed Environmental Assessment form (Appendix 4, Short EAF) or a State Environmental Quality Review (SEQR) under Article 8 of the Environmental Conservation Law and its implementing regulations as codified in Title 6, Part 617, of the New York Code of Rules and Regulations.

3) Preliminary Illustrative Site Plan (Appendix 11, Illustrative Site Plan). Site Plan must be done to scale showing the necessary details for the project.

4) If requested by the Planning Board, professional engineered plans may be required. Site Plan drawings prepared by licensed professionals (engineers/surveyors) must be stamped with the responsible person's seal and signature. Professionals must comply with New York State Education Law, Article 145, and 7209 Special Provisions. The Planning Board may require elevation drawings of the project.

5) Photographs of the site are required.

6) Existing Natural Features and Infrastructure: The application shall include the following if required by the Planning Board:

a) the existing geologic features;

b) topographic features

c) soil characteristics

d) hydrologic features including drainage, runoff pattern, flood hazard areas, wetlands, and depth to ground water;

e) the location, size, and flow direction of existing sewers, water supply lines and culverts, major electric, gas, telephone lines, easements and right-of-ways;

f) the existing use of adjacent property including any parking and loading areas, fences, trees, and landscaping;

g) the location of any New York State Certified Agricultural Districts; and

h) Town of Cape Vincent critical environmental areas shall also be shown.

7) Proposed Project: The proposed site plan application shall show:

a) all proposed grading including drainage plans;

b) the location and proposed use of buildings and other structures including their proposed height; location, proposed use, design, and construction materials of improvements not requiring structures such as parking lots, loading and outdoor storage areas;

c) the location and arrangement of site ingress and egress, walkways and paths for vehicular and pedestrian traffic;

a) location and size of proposed water and sewer lines;

b) location, design, and construction materials of all energy distribution facilities;

c) location and design of all outdoor lighting;

d) the location, design and size of proposed signage;

e) a general landscaping plan and planting schedule; and

f) estimated project construction schedule with any phasing plan for large projects shall also be included.

d. Once an application has been accepted as complete by the Planning Board, the Board shall have a maximum of sixty-two (62) days to hold a public hearing and another sixty-two (62) days in which to render their decision. However, the time within which the Planning Board must render its decision may be extended by mutual consent of the applicant and the Planning Board.

1) Within sixty-two (62) days from the completed application date, the Planning Board shall hold a public hearing on the proposal to entertain public comments. At least ten days in advance of the public hearing the following notifications shall be made:

2) The notice of the hearing shall be published in the official newspaper, and posted on the Town Office public bulletin board, and on the Town's official website.

3) The appellant/applicant shall send a copy of the public hearing notice, via certified mail to all owners of abutting properties, including properties immediately across the road. The names and addresses of these property owners shall be supplied to the applicant by the secretary of the Planning Board. Proof of certified mailing must be submitted to the Planning Board Chair.

e. The final decision of the Planning Board must be made within sixty-two (62) days following the public hearing, in writing, specifying any conditions that may be attached to the approval, the reasons that the Planning Board approved or denied the proposal and the motions/votes by the Planning Board members. All decisions shall be filed in the Office of the Town Clerk and a copy mailed to the applicant.

f. Application for variance: Notwithstanding any provision of law to the contrary, where a proposed site plan contains one or more features which do not comply with the Law, the Planning Board shall require that the applicant apply to the Zoning Board of Appeals for a variance.

g. The Planning Board shall refer all site plan matters that fall within those areas specified, under General Municipal Law, Article 12B, Section 239-M to the County Planning Board prior to their final vote thereon. All filing of provisions General Municipal Law Article 12 B, Sections 239-B shall be adhered to. (Appendix 6, SEQR Flow Chart)

4) Review Criteria:
Planning Board's review of the Site Plan application shall include, where appropriate, the following considerations:

a. Status of any federal, state, or county permits required.

b. Compliance with the provisions of the Environmental Assessment and State Environmental Quality Review (SEQRA) Act under Article 8 of the Environmental Conservation Law and its implementing regulations as codified in Title 6, Part 617 of the New York Code of Rules and Regulations.

c. Environmental impact on the unique features, community and adjacent areas, including physical, scenic views as seen from roadways or waterways, social and economic.

d. Location, arrangement, size, design, and general site compatibility of buildings, lighting, and signs.

e. Adequacy and arrangement of vehicular and pedestrian traffic access and circulation, including intersections, road widths, pavement surfaces, dividers, traffic controls.

f. Location, arrangement, appearance, and sufficiency of off-street parking and loading.

g. Adequacy of storm water and drainage facilities, water supply and sewage disposal facilities, and the proper use of retention basins.

h. Adequacy, type and arrangement of trees, shrubs and other landscaping constituting visual and/or noise buffer between the applicant's and adjoining lands, including maximum retentions of existing vegetation.

i. Adequacy of fire lanes and other emergency zones.

j. Conformance with all other provisions of this Law.

5) Additional Conditions:
The Planning Board may attach safeguards and conditions to any site plan that include, but not limited to, approval of any required federal, state, or county permits, redesign of building access, parking, pedestrian path location or arrangement, additional landscaping or screening, protections of natural, scenic, and cultural resources as defined by "A Joint Comprehensive Plan for the Village and Town of Cape Vincent."

6) Installation:
In order that the Town has the assurance that the construction and installation of improvements such as storm sewers, water supply, sewage disposal, landscaping, road signs, sidewalks, parking, access facilities, ingress and egress areas, and road surfacing will be constructed, the Planning Board may require that the applicant complete one of the following agreements:

a. Furnish bond executed by a surety equal to the cost of construction of such improvements as shown on the plans and based on an estimate furnished by the applicant and approved by the Planning Board. Such bond shall require the approval of the Town Board and the Town Attorney as to form, sufficiency, and manner of execution and surety.

b. In lieu of the bond, the applicant may deposit cash, certified check, an irrevocable bank letter of credit, a certificate of deposit, or other form of financial security acceptable to the Town Board and Town Attorney and shall be kept on deposit with the Town for the duration of the bond period.

c. The bond may at the discretion of the Planning Board be reduced after all of the infrastructure has been completed, inspected, and accepted for dedication to the Town, but in all events, the bond

or other security shall not be reduced or released below twenty percent (20%) of the original amount for a period of two (2) years after acceptance of the infrastructure by the Town.

7) Acceptance of Roads and Facilities:
When the Town's Highway Superintendent, Zoning Enforcement Officer, and Engineer, following final inspection of the improvements, certify to the Town Board that all infrastructure installations and improvements have been completed in accordance with the Town approvals, the Town Board may, by resolution, proceed to accept the facilities for which the bond had been posted or check deposited.

8) Decommissioning:
The specific decommissioning requirements are dependent on the application, i.e. Non Commercial.

There are uses/projects permitted in this Law which if not decommissioned/removed at the end of their useful life could be extremely detrimental to the Town and its citizens' health, safety and welfare. They include, but are not necessarily limited to, cell towers, radio antenna transmission towers, industrial wind energy generating structures and other like equipment, excluding SWECS. Because of the possible size and complexity of these uses/projects, the following requirements may be imposed on the applicant:

a. The anticipated life of the structure must be determined during any municipal review process.

b. The estimated decommissioning cost in current dollars.

c. How said estimate was determined, including the amount that the decommissioning cost may be offset by the salvage value of the structure.

d. A method shall be determined by the Town Board, such as an annual estimate by an independent licensed professional engineer or qualified estimator approved by the Town, in order that the decommissioning costs will be kept current.

e. The manner in which the structure will be decommissioned and the site restored, which shall include the following:

1) Removal of structure and associated ancillary equipment including transmission lines.
2) Removal of substations and associated ancillary equipment.

f. Removal of the concrete base of the structure to a minimum of five feet below the preconstruction grade and restoration of affected land to the preconstruction grade.

g. Removal of buried cables if less than five feet in depth.

h. A pre-decommissioning survey to be performed by an independent third party of roads, culverts, bridges, and affected land.

i. Removal of access roads and restoration of affected land.

j. Widening of roadways, if necessary, for heavy equipment and final restoration of all roadways used during removal.

k. Restoration of vegetation (consistent and compatible with surrounding vegetation) less any fencing or minor improvements requested by the landowner.

9) All "Decommissioning Fund" balances shall be deposited with the Town Clerk and shall be maintained in separate accounts. The fund balance shall be reimbursed to the Applicant/Owner/Operator upon final removal of the structure and certification by the Zoning Enforcement Officer that the required restoration of the site has been completed. SWECS are excluded.

The Planning Board may recommend to the Town Board the execution of the decommissioning funds to be held in escrow as the Town Board determines.

5.5 County Planning Board:

The Town Board, Planning Board, or Zoning Board of Appeals shall refer all amendments, site plans, special use permits, and variances that fall within those areas specified under General Municipal Law, Article 12-B, Section 239m to the County Planning Board, for its review, comments and approval or referral for additional work, prior to the local Boards' vote thereon. This includes actions that fall within five hundred (500) feet of the boundary of the Town, a state or county park or recreation area, a state or county highway or expressway, a state or county owned drainage channel, Agricultural District, and state or county land where a public building or institution is located.

1. If the County Planning Board does not respond within thirty (30) days from the time it received a full statement on the referral matter, then the local Board may act without such report

2. The local Board must report to the County Planning Board on its final action within seven (7) business days of the event.

5.6 Certificate of Zoning Compliance:

1. A Certificate of Zoning Compliance shall be issued to the applicant prior to the initiation of construction. No Certificate of Zoning Compliance will be issued until all conditions, if any, of the Planning Board or the Zoning Board of Appeals are met.

2. No land, building, or structure shall be occupied or used until a Certificate of Zoning Compliance has been issued by the Zoning Enforcement Officer stating that the building, structure, or proposed use thereof complies with the provisions of this Law.

3. The Zoning Enforcement Officer shall maintain a record of all Certificates of Zoning Compliance. The record shall be furnished upon request to any person intending to lease, rent, or buy the building.

4. In the absence of the Zoning Enforcement Officer, the Zoning Board of Appeals may issue a Certificate of Zoning Compliance.

5.7 Application Fees and Review Costs:

1. All applicants are required to pay an application fee to offset the administrative expenses of the Town. The application fees are set by resolution of the Town Board. Failure to pay the application fee shall constitute an incomplete application.

2. Applications for large-scale developments or developments which pose an inherent negative environmental risk may also warrant additional escrow fees to pay the fees of consultants hired as advisors to the Town. The Town Board reserves the right to retain legal and/or professional services from a range of disciplines to assist it in evaluating the complexities of proposed large-scale developments. Consequently, the Town may require that the Applicant initiate and maintain a Professional Fees account with funds sufficient to pay for fee-for-service consultation.

3. All unused funds from the Professional Fees account shall be refunded to the responsible party upon completion of the following:

    a. Final approval or rejection of any application.

    b. Final approval of any and all completed improvements and submission of all bills to the Town for its review of expenses incurred as a result of the applicant's proposed plan.

    c. Resolution of all contractual obligations.

5.8 Violations and Penalties:

1. Violation Remedy Procedures:

    a. Initiation of a Complaint – Whenever a violation of this Law occurs, the Zoning Enforcement Officer, Town official, or an aggrieved citizen may initiate a complaint. Such complaints shall be submitted to or initiated by the Zoning Enforcement Officer and it shall be in writing.

    b. Recording the Complaint – The Zoning Enforcement Officer shall accurately record the complaint and file it as prescribed in this Law.

c. Notice of Violation – The Zoning Enforcement Officer shall have 14 days to evaluate the validity of the complaint. If it is a valid complaint, the Zoning Enforcement Officer shall notify the landowner(s) by certified, return receipt requested mail as to the violation of the Law and the period of time granted to remedy the violation. The landowner shall have fourteen (14) days from receipt of the letter to remedy the situation or provide an acceptable timetable to remedy the situation. The Zoning Enforcement Officer may informally contact the landowner about the situation before this formal notification is made. In no case shall more than fourteen (14) days pass from the date the complaint is recorded to the date that the written notice is sent to the property owner. If the Zoning Enforcement Officer finds there is no violation of the Law, the complainant shall be notified of such in writing.

d. Stop Work Order – A "Stop Work Order" may be issued to the land owner. It is issued in the same manner as a "Notice of Violation." This Order requires that all work at the site stop immediately. (Appendix 7, Stop Work Order, and Appendix 8, Notice of Violation.)

e. Local Proceedings – If a violation persists, the Zoning Enforcement Officer shall file an "Information and Complaint" with the party in violation and the Town Board.

f. The Town Board may authorize the filing of an action or proceeding in the name of the Town of Cape Vincent in a court of competent jurisdiction to compel compliance with or restrain by injunction the violation of this Law.

2. Penalties: The penalties set forth for a violation of this Law are those prescribed by Town Law, Section 268. A Violation of this Law shall be punishable by a fine not exceeding Three Hundred Fifty Dollars ($350) or imprisonment for a period of not exceeding six (6) months, or both, for a first offense. Each week's continued violation shall constitute a separate additional violation.

5.9 Interpretation:

Interpretation and application of the provisions of this Law shall be held to be minimum requirements, adopted for the promotion of the public's health, safety, and general welfare. Whenever the requirements of the Law differ with the requirements of other lawfully adopted rules, regulations, or ordinances, the most restrictive or that imposing the higher standards shall govern.

6. GENERAL ZONING REGULATIONS:

6.1 Air Pollution:

1. Any activity, operation, or device which causes or tends to cause the release of air contaminates into the atmosphere shall comply with the appropriate requirements of the county, state, and federal standards.

6.2 Drainage:

1. Provisions for storm water drainage shall be designed to safely retain storm water or adequately carry away and discharge accumulated runoff into drainage channels, storm sewers, or natural watercourses so that it does not cause damage or flooding downstream.

2. The New York State Department of Environmental Conservation (DEC) regulations will control in case of a disagreement between the applicant and the Town.

6.3 Electromagnetic Frequency or Radiation Interference:

1. No activity, operation, or use shall cause electromagnetic frequency or radiation interference that:

   a. Adversely affects persons or the operation of any equipment across lot lines.

   b. Is not in conformance with the regulations of the Federal Communications Commission.

6.4 Erosion and Sedimentation Control:

1. The intent of this Section is to minimize any sedimentation and erosion that may be associated with any construction or grading involving land alteration.

2. The erosion and sedimentation control plan shall be prepared by a qualified person trained and experienced in erosion and sedimentation control methods and techniques.

3. The control plan shall consider all factors which contribute to erosion and sedimentation including, but not limited to, the following:
   a) topography,
   b) soils,
   c) the proposed alteration to the area,
   d) the amount of run-off from the project area and the upstream watershed area,
   e) the staging of earth moving activities, and
   f) temporary and permanent control measures

4. The erosion and sedimentation control shall be managed in a manner consistent with all applicable county, state and federal regulations.

6.5 Fences:

1. Agricultural fences are exempt from these regulations.

2. No fence shall exceed six feet in height from the natural grade except a fence surrounding a scrap or salvage yard which shall be a minimum of eight (8') feet in height.

   The Planning Board shall have discretion to allow some other type of visual barrier for scrap or salvage yards in lieu of a fence, such as an earthen berm.

3. Fences shall not extend beyond the front of the residence dwelling Borders with a maximum height of two (2) feet may extend beyond the front of the dwelling, but not beyond the front setback line.

4. All fences shall be built and constructed of materials commonly used in fence construction, for example: wood, chain link, vinyl, aluminum or plastic components.

5. All fences must be erected no closer than two feet from the property line and installed with the most aesthetic side facing out.

6. Swimming pools requiring a fence under the guidelines of the New York State Fire Prevention and Building Code shall comply with that Code.

7. Stone and masonry walls a maximum of two feet (2) high are considered boundaries and shall be no closer than two (2) feet to the property line.

6.6 Fire and Explosive Hazard:

1. The primary purpose of this Law is to protect the safety of the citizens and properties of the Town. Attention to the prevention of fire and explosive hazards is imperative.

2. All activities operations and uses shall be conducted in accordance with local, county, and state fire prevention codes.

6.7 Noise:

1. Intent:

   Cape Vincent is a quiet area, where nighttime background sound levels are routinely less than 30dB, and it is a community that values peace and quiet, which is an important part of rural life. Loud, annoying and persistent noise is disruptive to the well-being of people living in its vicinity and is in some cases deleterious to their health. To preserve and protect peace and quiet, the Town hereby declares its intent to regulate noise in accordance with widely recognized acoustic standards.

   Regulating noise requires more than preventing unnecessarily loud noise; it also recognizes that the quality and character of noise both contribute significantly to annoyance. Noises that are distinctly different from natural background sound, those with impulsive, tonal or modulating elements, are further restricted.

These regulations are intended to be used, if the need arises, for any source of loud, annoying, or unhealthy noise.

2. Noise Sources:
The types of sources of noise that this regulation is designed to regulate in Cape Vincent include but are not limited to:

a. Mining/Quarry operations
b. Wind turbines, WECS, SWECS
c. Gas, water, or other types of drilling
d. Blasting operations
e. Gas turbine electric generation
f. Other industrial and non-industrial sources where noise may be excessive and annoying.

3. Exemptions to Regulations:
The following noises are deemed beyond the scope and intent of the Town to regulate and are not subject to this Section:

a. Any noise intended to warn the public or indicate the existence of an emergency condition, including any warning device, siren, horn or whistle used by emergency vehicles or by any governmental agency to alert the public to an emergency or warn of a dangerous condition.

b. Any noise within limits set by and under the jurisdiction of any state or federal act preempting local regulation.

c. Mechanized noise from farming and agricultural operations.

d. Noise generated by or produced in association with a religious celebration or observance, parades, or other special municipal events.

e. Noise from gas-powered electric generators used during power outages.

f. Construction equipment used between 7 a.m. and 9 p.m., except in emergency situations.

g. Non-industrial noise that is considered a part of normal personal activities, such as but not limited to motor vehicles, boats, and yard care.

4. Requirements:

a. The equivalent noise level (LEQ) generated by a noise source shall not exceed the limits listed in Table 9 when measured at the property line.

TABLE 9	**Daytime 7 a.m. to 7 p.m.**	**Evening 7 p.m. to 10 p.m.**	**Nighttime 10 p.m. to 7 a.m.**
A-weighted (dB)	45	40	35
C-weighted (dB)	63	58	53

b. In all cases, the corresponding C-weighted limit shall be the operable A-weighted limit (from Table 9) plus 18dB.

c. In the event audible noise due to any operation that contains a steady pure tone, such as a whine, screech, or hum, the standards for audible noise set forth in Table 9 shall be reduced by five (5) dB; for impulsive noises the standards in Table 9 shall be reduced by 7 dB; and the standards shall be reduced by12 dB for highly impulsive noise (ANSI S12.9 Pt. 4).

5. Predicting Noise Impacts:
At the discretion of the Planning Board an application shall include certification by an independent acoustical engineer as to the predicted A- and C-weighted sound levels at potentially impacted residential property lines. The firm with which the engineer is associated shall be a member of the National Council of Acoustical Consultants (NCAC) with a specialty in environmental noise, and the independent acoustical engineer shall be a Member, Board Certified of the Institute of Noise Control Engineering of the USA. The predicted noise levels shall then be reviewed by the Town's consulting engineer, or their agent, to establish the validity of the predicted impacts.

6. Enforcement:
a. Enforcement shall be by measurement and not subject to the timing constraints. The Town, using the services of the Town Engineer, shall be responsible for and shall contract for any enforcement measurements. The Town's engineering contractor shall be a member of the National Council of Acoustical Consultants (NCAC) with a specialty in environmental noise, and the consultant's project leader shall be a Member, Board Certified of the Institute of Noise Control Engineering of the USA. The following protocol may be modified as certain situations may require by the acoustical engineer as long as modifications are in general conformance with the procedure described below.

b. Initially a preliminary study shall be conducted for a period of 30 minutes. During the thirty- (30) minute period, the equivalent level (LEQ) generated by the noise source shall be measured. The measurement location shall be on complainant’s property line, nearest the noise source. Measurements shall be entirely

within the appropriate time period, e.g., during nighttime for nighttime enforcement, and the noise source shall operate continuously (if normal operation) during the thirty- (30) minute measurement.

c. If the noise source is intermittent or if the noise is not present at the time of the preliminary enforcement survey, a more extensive and detailed survey shall be undertaken to monitor noise levels over a longer period. The subject of the complaint shall fully cooperate with Town officials and their agents to ensure accurate measurements, including turning on and off as required.

d. For both types of surveys, the microphone shall be situated between 4 and 4.5 ft. above the ground. Measurements shall be conducted within the general provisions of ANSI S1.13-2005, and using a meter that meets at least the Type 2 requirements of ANSI S1.4 and S1.4A-1985 (R2006). The instrument noise floor shall be at least 10 dB below the lowest level measured.

e. A calibrator shall be used as recommended by the manufacturer of the sound-level meter. The fundamental level of the calibrator and the sensitivity of the sound-level meter shall be verified annually by a laboratory using procedures traceable to the National Institute of Standards and Technology.

f. A wind screen shall be used as recommended by the sound-level meter manufacturer.

g. An anemometer shall be used and shall have a range of at least 5 to 15 miles per hour (2.2 to 6.7 meters per second) and an accuracy of at least ± 2 miles per hour (± 0.9 meters per second).

h. For the detailed, long-term study a compass shall be used to measure wind direction to at least an 8-point resolution: N, NE, E, SE, S, SW, W, NW. Measurements shall be A-weighted, or, alternatively, in one-third-octave bands. For A-weighted measurements, the uncertainty (tolerance) of measurements shall be 1 dB for a type 1 meter and 2 dB for a type 2 meter. For one-third-octave-band measurements, the meter shall meet the type 1 requirements of ANSI S12.4 and S12.4a-1985 (R2006), and the uncertainty of measurements shall be 5 dB in each and every one-third-octave band.

i. For all measurements, the surface wind speed, measured at a 1.5-m height, shall be less than 5 m/s.

1. The report shall include a sketch of the site showing distances to the structure(s), to the property line, etc., and several photographs showing the structure(s), the property, and

the acoustical instrumentation. All instrumentation shall be listed by manufacturer, model, and serial number. This instrumentation listing shall also include the A-weighted and C-weighted noise floor due to weather or other natural phenomena and the one-third octave band noise floors, if utilized, for each sound-level meter used.

7. Complaint Resolution Process:

a. All complaints shall be directed to the Town Zoning Enforcement Officer who will respond to the complainant within five (5) business days after receipt of such complaint. The Town Zoning Enforcement Officer shall keep a log of any such complaints received.

b. Any complaints which cannot be resolved during the initial response shall be subsequently directed to the Town Engineer for investigation, and any such investigation shall be undertaken with the full cooperation of the person/ applicant/ operator and in accordance with Section 6.7.6, Enforcement.

c. If the complaint includes the character or quality of noise, then any subsequent investigation shall use best practices to evaluate the overall level, tonal, and/or temporal nature of the noise prompting the complaint. As outlined in Section 6.7.6, Enforcement, the noise source will be shut down as may be needed to properly assess noise impacts.

d. Testing shall commence within ten (10) business days of the report of the initial investigation, but ultimately testing will be predicated upon conditions that facilitate adequate measurement of the noise source. Testing shall compare actual noise measurements at complainant's property line with and without noise source to confirm operation complies with noise limits established in Table 9. If sound levels of the noise source exceed sound levels with noise source off by more than 5dB, then the noise shall be deemed out of compliance with this regulation.

6.8 Odor:

1. Intent:

Odor is defined in the Environmental Protection Agency's (EPA) air pollution control rules as "the sensation resulting from stimulation of the human sense of smell." Our sensitivities and reactions to odors are influenced by personal preferences, opinions, experiences, and the varying sensitivities of our olfactory systems. These can be naturally occurring as in nature and man-made in causations.

2. No man-made odors shall be detected at the property line for more than 4 hours in a 24-hour period except those covered by regulations of other agencies.

3. Odors normally associated with agricultural activities are excluded.

6.9 Outdoor Lighting:

1. Intent:
   Outdoor lighting is critical to the public safety and to provide required security. Therefore, adequate lighting should be provided on a site to ensure safe movement of persons and vehicles and for security purposes. All outdoor lighting shall be arranged and shielded so as to prevent any undo annoyance to neighboring properties.

2. Design:
   The following design standards shall be followed on all site development plans:
   a. The maximum height of free-standing lights shall be the same as the principal building but not exceeding thirty-five (35) feet.

   b. All lighting fixtures shall be placed within the Lot Utilization Area. No light fixtures may be placed in the Lot Exclusion Area except as required for personal safety.

   c. Where lights located along the utilization lines will be visible to adjacent residents, the lights shall be arranged and shielded so that no direct light will leave the Lot Utilization Area.

   d. Lighting on roadways, sidewalks, paths, and parking areas of commercial and industrial property shall be adequate to prevent injury or mishap.

   e. Lighting within the Lot Exclusion Area for egress and ingress is allowed for safety.

6.10 Outdoor Storage:

1. Outdoor storage of materials that are not intended for sale to the general public within three (3) months, shall be screened from the road and from adjacent properties. Such storage shall not be permitted within one hundred (100) feet of the front lot line or the side Lot Utilization Area.

2. Long-term outdoor storage is allowed only in containers designed for storage and not on a chassis and shall be fully screened from the road and adjacent properties. The container must be within the Lot Utilization Area. Storage is not permitted in a container(s) not specifically designed for that purpose. At an on-going construction site, shipping containers or trailer boxes shall be removed within one (1) month of completion of the construction.

3. Winter seasonal storage of boats, recreational vehicles, and motor vehicles is permitted outside. Proper precaution shall be taken to ensure that they are safely stored, supported, and are not subject to vandalism. Outside long-term, more than two (2) years storage of boats,

recreational vehicles, or motor vehicles that are not used each season is not permitted.

6.11 Parking Requirements:

The Town finds highly visible parking areas represent an objectionable aspect of commercial development by potentially harming the natural environment and visual character of the Town. However, the Town also recognizes that inadequate parking can also diminish the quality of life by creating traffic congestion, safety hazards, and inconveniences. Therefore, the location, design, and layout of parking areas shall meet the following criteria:

1. All commercial off-street, on-site parking shall be restricted to the Lot Utilization Area and shall be ADA (Americans with Disabilities Act) compliant.

2. All parking in the Light Manufacturing Districts shall be restricted to the Lot Utilization Area. Alternatively, parking may be on the side of the Lot Utilization Area when approved during the Site Plan Review. In this case, the parking area shall be screened from the roadway in front of the lot and adjoining lots. Parking in the Retail/Professional District shall be restricted to the Lot Utilization Area.

3. All uses shall be provided with off-street, on-site parking for all vehicles during typical peak use periods. Off-street parking may be located off site but must be within 300 feet of the site. Off-street loading spaces shall be provided as required in Section 6.11.8, Off-Street Loading.

4. A parking space shall not be less than nine (9) feet in width by twenty (20) feet in depth, exclusive of access ways and driveways.

5. To the greatest extent possible, the size of all parking areas, other than those for dwelling units and dwelling units with a home occupation, shall be based on Gross Leasable Area (GLA). Where GLA figures are unavailable, gross floor area figures shall be used.

6. A minimum of 8 percent of a parking area shall be landscaped with lawn, flowers, shrubs, or other plant material. Such shrubs shall not be high enough to interfere with a driver's line of site. Any parking area for greater than ten cars shall be screened (to the extent practical) from the road and adjoining properties. Such screening shall not interfere with safety standards for sight distance at road access points.

7. Required Parking Spaces: **Table 10**

Dwelling Unit	Two (2) Spaces per unit
Dwelling Unit with Home Occupation	Two (2) spaces per unit plus additional one (1) space for every 150 square feet of home occupation area.

General Office	One (1) space per each 200 sq. ft. GLA
Medical Office	One (1) space per each 150 sq. ft. of GLA.
Small Retail	One (1) space per 200 sq. ft. GLA
Large Retail	One (1) space per 400 sq. ft. GLA
Additional parking required for facilities with drive-up windows	Three (3), twenty-(20) ft. long x nine-(9) ft. wide waiting spaces for each drive-up lane. Where multiple drive-up windows exist, there shall be additional waiting spaces, which shall be in a common lane.
Restaurants	One (1) space per 50 sq. ft. GLA
Commercial Operations	One and one half (1-1/2) spaces for each employee on the largest shift.
Marinas	Two (2) spaces per every three (3) boat slips
Riding Stables	One (1) space per 3 horse stalls

a. All fractional portions of parking spaces as calculated by GLA shall be deleted if the fraction is less than .50. Otherwise, one additional parking space is required.

b. Where the use or traffic generation of a site is such that the applicant can show that the number of parking spaces required is not justified, the Planning Board may adjust these requirements accordingly.

8. Off-Street Loading:
All uses, other than dwelling units or dwelling units with home occupation, must comply with the following off-street loading standards.

a. First 5,000 sq. ft. GLA 1 dock

b. Each additional 10,000 sq. ft. GLA 1 dock

c. Each loading dock shall be a minimum of 12 feet wide, 50 feet long, and 14 feet in height.

d. Loading areas for funeral homes shall be a minimum of 10 feet wide, 25 feet long, and 8 feet in height.

e. Where the use or traffic generation of a site is such that the applicant can show that the number of docks required is not justified, the Planning Board may waive these requirements.

6.12 Property Safety:
Intent:

The Town's intent to preserve and promote a reasonable quality of environment and to prohibit actions and conduct that tend to depreciate not only the property on which it is located but also the property of other persons in the neighborhood and the health of the community in general. Automobile junkyards are prohibited (refer to Table 8). Junk automobiles are as defined in General Municipal Law Section 136 and Property Maintenance Code of New York Section 302.8. Outside long-term, more than two (2) years storage of boats, recreational vehicles, or motor vehicles that are not used each season is not permitted and shall be removed at the end of the two (2) year period.

For purposes of this Section, and other than the exclusion items listed below, the accumulation of the following items is prohibited:

1. All decomposable animal waste resulting from growing, processing, marketing, and preparation of food items, including containers in which the product is packaged.

2. Rubbish, clutter, litter, and debris: Ordinary household or commercial trash such as paper and paper products, barrels, cartons, boxes, cardboard, cans, glass, metals, machinery, plastics, rubber, crates, furniture, rugs, clothing, rags, mattresses, blankets, tires, lumber, brick, stone, and other building materials no longer intended or in condition for ordinary use, and any and all tangible personal property no longer intended or in condition for ordinary and customary use.

3. Worn out or discarded material of little or no value.

Exclusions:

1. Materials such as firewood, coal, pellets and corn intended for consumption in heating appliances.
2. Lawn, yard, or garden ornaments
3. Lawn and patio furniture
4. Operable farm, garden, and yard machinery
5. Standing fences
6. Hoses, and sprinklers used for watering lawns or gardens
7. Storage or placement and accumulation of materials in connection with a commercial operation duly conducted on the premises where such storage, placement, and accumulation is expressly permitted by the Laws of the municipality.
8. Composting of yard and kitchen vegetable waste is excluded.

6.13 Radiation Hazard:

Controlled radiation sources are used for many industrial and medical applications. Radiation sources should be properly overseen to ensure the safety, health, and welfare of the community. Therefore:

1. All industrial and medical radiological concerns are addressed by State Regulations 10NYCRR, Part 16.

2. Radiation hazards related to energy shall comply with the Regulations of the NRC, 10CFR-Energy.

6.14 Restoration of Land:

1. Upon completion of the project, all areas which were disturbed by the project shall be stabilized so that erosion shall be prevented.

2. Any erosion and sedimentation control facility required or necessary to protect areas from erosion during the stabilization period shall be maintained until stabilization is complete.

3. Upon completion of stabilization, all unnecessary or unusable control facilities shall be removed and the areas shall be graded and the soil stabilized.

4. In addition to compliance with the above, the requirements of the Planning Board and the requirements of the DEC shall also be complied with.

6.15 Screening:

1. Where an industrial or commercial use will be adjacent to a residential use or where a multi-family dwelling, manufactured (mobile) home park, recreational area, or recreational field (such as a ball field) will be adjacent to a single or two-family dwelling, the Planning Board may require that an opaque screen be provided from the ground to a minimum height of six (6) feet.

2. Such screening may be comprised of living plants, wooden walls, berms, or a combination.

3. If living plants are used, they shall provide year-round screening and placed far enough from the neighboring property line that the vegetation will not spread onto the neighboring property.

6.16 Signs:

1. Permits:
   Zoning permits are required for all permanent signs.

2. All permanent signs shall meet the following requirements:

   a. No sign shall have moving parts, lights that flash, move, or appear to move.

   b. No sign shall be higher than the principle building to which it is attached.

   c. The maximum height of a free-standing sign is 15 feet from the ground.

   d. No sign shall be painted or erected on the roof of any building.

e. No general advertising signs unrelated to the premises or not serving as a directional sign to a business within the Town boundaries are permitted.

f. All existing signs, at the time this Law is adopted, if not in violation of prior laws, shall be allowed to remain as long as they are properly maintained and their use remains current.

g. Any business, enterprise, institution, or other advertising entity that ceases operations shall remove its sign(s) within 90 days of such cessation (an extension of 90 days may be granted upon approval of the Planning Board.)

h. Two on-site permanent signs, one on building and one on monument and each not to exceed 32-square feet shall be permitted. Two-sided signs bearing announcements on two sides shall be considered as one sign.

i. Signs for historical and community-related information are allowed when approved by the Planning Board.

j. Informational signs unrelated to the business name highlighting available uses such as restrooms, emergency exits and signage required by the American with Disabilities Act (ADA), i.e. curb ramps, handicapped parking, special areas, shall be a maximum of 12 X 24 inches.

3. Temporary Signs:
   a. Announcement, special event, real estate, and political signs are considered temporary and must be removed within one week after an event, project completion, sale, or election. Temporary signs must comply with all the requirements of this Section.

4. Prohibited Signs:
   a. Signs on the sides of unlicensed cars, vans, trucks, and trailers that are visible from any road are prohibited.

6.17 Traffic:

1. The Planning Board may request a traffic impact survey.

6.18 Road Conditions:

1. All roads including those under construction must be usable and accessible for emergency vehicles at all times.

6.19 Vibration:

1. Intent:
   Mechanical equipment may cause increased vibrations in the ground. It is the intent of this requirement to control the increased vibration in an adjoining property resulting from an operation on the subject property.

Examples of such an operation include, but are not limited to, mining, drilling, metal fabrication.

2. Requirement:
No use, operation or activity shall cause or create earthborn vibrations in excess of the peak particle velocities prescribed below.

3. Method of Measurement to Determine Compliance:

   a. Compliance shall be determined by a professional vibrations engineer using standard state-of-the-art evaluation methods.

4. Vibration Standards:

   a. Maximum permitted steady state vibration levels shall be 0.02 inches per second peak particle velocity at the lot line.

   b. Impact vibrations shall be permitted at twice the values stated above.

   c. Between the hours of 10 p.m. and 6 a.m., all of the permissible vibration levels (0.02) for the Agricultural Residential, Lake Front, Lake Recreational, River Front, and Islands Districts shall be reduced to one-half (½) the indicated values.

   d. When the frequency of impacts does not exceed one (1) per day, the maximum vibration level, measured across lot lines, shall not exceed 0.4 inches per second.

7. SUPPLEMENTAL REGULATIONS

7.1 Adult Entertainment/Adult Use:

1. Intent:
It is recognized that there are certain business activities which, by their nature, may have objectionable operational characteristics. Therefore, it is recognized that special regulations are necessary in order to prevent the proliferation of such businesses and to ensure that those effects will not adversely affect the health, safety, and economic well-being of the community.

2. Adult Uses may be permitted in the Light Manufacturing District only if the following conditions are met:

   a. No adult use shall be permitted within 1,000 feet of a dwelling.

   b. All building openings, entries, windows doors, etc. shall be located and covered or screened in such a manner as to prevent any view into the interior from the outside of the building. This includes a privacy panel inside any exterior door to prevent a view into the building from an exterior door.

   c. Only one sign shall be permitted on the exterior of the building which is occupied by an adult use. This sign shall be no larger

than 12-square feet of sign area. The sign shall contain plain lettering. No graphic display, such as drawings, photographs, etc. is permitted.

7.2 Automotive Service/Repair Stations:

1. All gasoline and fuel pumps shall be a minimum of 75 feet from any front or side lot line. All fuel storage and dispensing systems for automotive service stations shall be confined within the Lot Utilization Area of the property as determined with minimum setbacks of 75 feet on all sides of the lot. If county, state, or federal requirements are more stringent they shall apply.

2. All waste and servicing material shall be stored within a structure or enclosed within fencing so as not to be visible from off the property line.

3. All waste shall be stored and disposed of in accordance with applicable county, state, and federal laws.

4. Ingress and egress driveways will be determined during Site Plan Review.

5. Vehicle parking shall be determined by the Planning Board.

7.3 Boathouses and Covered Docks

1. Location, design, and approval:
   Boathouses and covered docks are controlled by federal and state agencies, such as but not limited to, Army Corp of Engineering, Department of Environmental Conservation (DEC), Office of General Services, and the office of Coastal Zone Management.

2. Additional Requirements:
   The Town acknowledges that the federal and state agencies are responsible for the control of boathouses and covered docks; however, to retain the scenic environment, the Town imposes the following additional requirements on these structures.

   Location: boathouses and covered docks must comply with the side setback requirements of the Cape Vincent Zoning Law. The setbacks are determined by extending the side lot line to the far end of the structure from the shore.

   Height: boathouses and covered docks are limited to the height required to lift the boat out of the water for storage, 25' maximum above the International Great Lakes datum elevation 247.30. No storage or living accommodations are allowed above the area used for the boat.

Roof: The roof of the boat house and/or covered dock shall have a maximum of a 4/12 pitch so as not to disrupt the view any more than necessary from adjoining lot(s).

7.4 Commercial:

1. Parking areas shall be an improved area made of asphalt and suitable for vehicular and foot traffic.

2. Outside display areas shall be an improved area made of gravel or asphalt and suitable for vehicular and foot traffic.

7.5 Home Occupations:

1. Restrictions:
   No Home Occupation shall be permitted that:

   a. Generates traffic, parking, noise, sewage, or water use in excess of what is normal in a residential neighborhood;

   b. Creates a hazard to person or property, results in electrical interference, or becomes a nuisance;

2. Permitted:
   The following are permitted Home Occupations provided they do not violate any of the provisions of Section 7.4.1.

   a. Dressmaking, sewing, tailoring.

   b. Painting, sculpting, or writing.

   c. Professional/Administrative/Clerical Services

   d. Home crafts; including model making, rug weaving, lapidary work, woodworking, ceramics, and similar crafts.

   f. Tutoring; child care as regulated in accordance with state, regulations.

   g. Home cooking and preserving in accordance with the New York State Department of Health regulations.

   h. Computer programming and data processing

   i. Beauty Shop and Barber Shop

   j. Room rental – one room per dwelling

3. Prohibited:
   The following are prohibited as Home Occupations:

   a. Veterinary Practice /Kennel

b. Private Club

c. Restaurant

d. Motel /Hotel/ Rental Units

e. Automobile repair or automobile paint shop

f. Adult entertainment as defined above

4. Special Use Permit:
Any proposed Home Occupation that is neither specifically permitted by Section 2 nor specifically prohibited by Section 3 shall require a Special Use Permit.

5. Employees:
Notwithstanding any provision of this Section, no Home Occupation will be permitted if it employs more than one non-resident of the dwelling.

7.6 Mining Operations:
Mining operations must comply with all applicable county, state, and federal regulations.

7.7 Manufactured (Mobile) Homes:
I. Mobile Home Specifications

1. Age Limitations:

a. To ensure that all manufactured (mobile) homes meet minimum federal standards every manufactured (mobile) home shall bear a data plate, affixed in the manufacturing facility. This plate shall show the date of manufacture and the statement, "This manufactured (mobile) home is designed to comply with the Federal Manufactured Home Construction and Safety Standards in force at the time of manufacture.

b. Because it cannot be reliably verified that manufactured (mobile) homes manufactured before June 15, 1976, were manufactured/ constructed of materials that are considered to be technically sound engineering materials and that materials typically used prior to this date have been shown to have caused safety problem, these manufactured (mobile) homes shall not be brought into the Town of Cape Vincent nor shall they be moved or relocated within the Town.

c. A re-conditioned manufactured home can be re-permitted if a licensed architect or engineer creates a stamped drawing of the manufactured home depicting that it meets all existing state and federal codes.

2. Skirting:

a. Every manufactured (mobile) home shall have continuous skirting to screen the space between the manufactured (mobile) home and the ground.

b. Such skirts shall be of permanent, rigid, material: such as but not limited to, metal, wood, plastic, and fiberglass. The skirting shall provide a finished, neat appearance when completely installed.

3. Installation:
All manufactured (mobile) homes shall be installed in accordance with all applicable county, state, and federal codes, and the manufacturer's recommendations.

4. Additions:
All additions must comply with all New York State Building Codes for manufactured homes.

II. Manufactured (Mobile) Home Parks (General Specifications):

1. Park Location and Conditions:
   a. The site of a proposed manufactured (mobile) home park:

      1) Shall have generally level to gently rolling topography over an area of sufficient size to allow development of the manufactured (mobile) home park without significant alterations or disturbances of existing natural topography or features such as stands of mature trees, stream courses, shorelines, wetlands, or bedrock outcroppings.

      2) Shall be essentially free from adverse, unsafe or unhealthy conditions including but not limited to flooding, ponding, poor drainage, erosion, slumping, or other soil instability, breeding areas for insects or rodents, smoke, noise, odors, heat, glare, or toxic or volatile substances.

      3) Shall be such that no manufactured (mobile) home site or park activities would be within 50 feet from the park lot line.

      4) Shall be adequately screened from adjacent residential properties and public roads as determined by the Planning Board during Site Plan Review or Special Use Review.

      5) Shall be divided (exclusive of internal roads, open space, or common areas) and marked off into manufactured (mobile) home sites numbered consecutively, the number being conspicuously posted on each lot with such number to correspond to the lot shown on the site plan submitted.

2. Park Design:
   1. Access:
      Each manufactured (mobile) home park shall provide for safe, legal means of access from one or more public roads as follows:

         a. access roads shall meet the public roads at right angles and at compatible grades;

b. entrances shall be located directly opposite or at least 200 feet from the nearest intersection of public road, if any, and at least 150 feet from any other entrances to the manufactured (mobile) home park, if any;

c. entrances shall have sufficient width to allow reasonable turning movements of vehicles with manufactured (mobile) homes attached and of service or delivery vehicles;

d. entrances shall be located to allow safe line-of-sight distances to and from their points of intersection with the public road;

e. at least one (1) common entrance and access road shall be required to serve any manufactured (mobile) home park having 3 through 19 manufactured (mobile) homes;

f. at least two independent entrances and access roads shall be required to serve any manufactured (mobile) home park having 20 or more manufactured (mobile) homes;

g. intersections with public roads shall meet the standards of the governing body having jurisdiction over the public road; and

h. all access road intersections shall be located in a manner and be of sufficient size to accommodate emergency vehicles.

3. Internal Roads:

a. Internal roads may be privately owned and maintained and shall provide for:

1) the safe operation of emergency vehicles;

2) the safe and convenient movement of vehicles, with or without manufactured (mobile) homes attached;

3) all manufactured (mobile) home sites shall face on and be serviced by such internal roads;

4) all roads shall be designed, graded, and leveled as to permit the safe passage of emergency and other vehicles;

5) straight, uniform gridiron road patterns should be avoided unless they can be relieved by manufactured (mobile) home clustering, landscaping, and an open space system;

6) cul-de-sacs shall be provided with a turnaround having an outside roadway diameter of at least 90 feet; and

7) all internal roads shall have a minimum of 30 feet of clearance and be made of all-weather material, e.g. gravel, paved, etc.

4. Parking:
   a. Each manufactured (mobile) home shall be provided with at least one off-street parking space adjacent to the manufactured (mobile) home.

   b. At least one additional off-street parking space for every two manufactured (mobile) home sites in the park shall be provided.

   c. Each parking space shall measure at least 9 feet by 20 feet or be capable of being adapted in order to meet ADA requirements.

   d. Recreational Area and Open Space:
      Easily accessible and usable open spaces shall be provided in all manufactured (mobile) home parks. Such open spaces shall have a total area equal to at least 35 percent of the gross land area of the park and shall be fully maintained by the park owner.

5. Garbage and Refuse:
   It shall be the responsibility of the park owner to ensure that garbage and rubbish shall be collected and properly disposed of outside of the manufactured (mobile) home park. Exterior property areas shall be maintained free from organic and inorganic material that might become a health, accident, or fire hazard.

6. Telephone, Electric, and Cable TV Services:
   When telephone, electric and/or cable TV service is provided to the manufactured (mobile) home site, the distribution system shall be placed underground.

7. Park Office and Storage Facilities:
   The owner or manager of a park shall maintain an office in the immediate vicinity of the park.

8. Service Buildings:
   a. Service buildings, if provided, housing sanitation and/or laundry facilities shall be permanent structures complying with all applicable ordinances and statutes regulating buildings, electrical installations, plumbing and sanitation systems

   b. All service buildings and the grounds of the manufactured (mobile) home park shall be well lighted and maintained in a clean and sightly condition.

9. Fire Protection:

   a. Open fires shall be permitted only in areas designated by the park owner.

b. The use of outdoor grills for the preparation of food is permitted.

c. The burning of refuse is not permitted.

10. Responsibilities of Park Owner(s) and Park Occupants:

a. The park owner, whom a permit for a manufactured (mobile) home park is issued, shall operate the park in compliance with applicable standards set forth in state, county, and local law and shall provide adequate supervision to maintain the park, its common grounds, streets, facilities, and equipment in good repair and in clean and sanitary condition. The park owner will be responsible for correcting any violation of this Law occurring within the owner's park.

b. The park owner shall supervise the placement of each manufactured (mobile) home on its manufactured (mobile) home base which includes ensuring the stability of all tie-downs and utility connections.

c. The park owner shall maintain a register containing the names of all occupants and the make, year, and serial number, if any, of each manufactured (mobile) home. Such register shall be available to any authorized person inspecting the park.

d. A park occupant shall be responsible for the maintenance of his/her manufactured (mobile) home and any appurtenances thereto and shall keep all yard space on his/her site in a neat and sanitary condition.

1) A list of owner and occupant responsibilities shall be posted in the park offices and be available upon request.

2) The park owner and its occupants shall make every attempt to minimize smoke, noise, odors, heat, glare, or toxic or volatile substances.

III. **Seasonal Home Park**:

1. Requirements:

Seasonal home parks shall meet the requirements of this Section and the Manufactured (Mobile) Home Park Section (General Requirements). Seasonal home parks may contain manufactured homes or cabins.

2. Site Size:

Each site shall satisfy the following requirements:

a. Minimum site size shall be 5,000 square feet.

b. Minimum site width shall be 50 feet.

c. Minimum site length shall be 100 feet.

3. Setbacks:
   a. All seasonal homes, including patios, porches, or garages, office building, dwelling and ancillary use buildings associated with the seasonal home park be contained within the Lot Utilization Area.

      For seasonal home parks, this area is defined by the greatest of the following boundaries:

      1) The front lot setback line for the district or a minimum of 150 feet from the center line of any public road.

      2) The side yard setback line for the district or a minimum of 10 feet from the side yard lot line, whichever is greater.

      3) The rear yard setback line for the district (25 feet).

4. Site Spacing:
   a. All seasonal homes, patios and ancillary use structures including but not limited to: garages storage sheds, located on the same site shall be within the site utilization area. The site utilization area is defined as the area within the site bounded by the following:

      1) Front site utilization line shall be a minimum of 30 feet from the centerline roadway on which it is located.

      2) The side site utilization lines shall be a minimum of 10 feet from the site side line.

      3) The rear site utilization line shall be a minimum of 20 feet from the rear site line.

5. Parking spaces:
   Parking areas may be grass or all-weather material, e.g. gravel, paved, etc.

6. Recreational vehicles
   Recreational Vehicles are allowed in seasonal home parks.

7. Landscaping:
   The Lot Exclusion Area shall be a green zone and landscaped with grass, shrubs, and trees and maintained to provide visual screening from adjacent properties and public roads.

IV. Manufactured (Mobile) Home Park--Year-Round:

1. Requirements:
   Year-round manufactured (mobile) home parks shall meet the requirements of this Section and the Manufactured (Mobile) Home Park Section (General Requirements).

2. Manufactured (Mobile) Home Site Size:

Each manufactured (mobile) home site shall satisfy the following requirements:

a. The minimum site size shall be 7,500 square feet.

b. The minimum site width shall be 75 feet.

c. The minimum site length shall be 100 feet.

3. Park Setbacks:

a. All manufactured (mobile) homes, including patios, porches, or garages, office building, dwelling and ancillary use buildings associated with the manufactured (mobile) home park shall be contained within the Lot Utilization Area. For manufactured (mobile) home parks this area is defined by the greatest of the following boundaries:

b. The setback line for the park shall be a minimum of 150 feet from the center line of any public road.

4. Site Spacing:

a. All manufactured (mobile) homes, patios and ancillary use structures including but not limited to: garages storage sheds, located on the same site shall be within the site utilization area. The site utilization area is defined as the area within the site bounded by the following:

1) Front site utilization line shall be a minimum of 30 feet from the centerline of the road on which it is located.

2) The side site utilization lines shall be a minimum of 20 feet from the site side line.

3) The rear site utilization line shall be a minimum of 20 feet from the rear site line.

5. Parking:

All parking spaces or areas in year-round parks shall be made of all-weather material, e.g. gravel, paved, etc.

6. Recreational Vehicles:

Recreational vehicles shall not be placed on a site in year-round manufactured (mobile) home parks.

7. Landscaping:

The Lot Exclusion Area shall be a green zone and landscaped with grass, shrubs, and trees and maintained to provide visual screening in accordance with Section 6.15, Screening, from adjacent properties and public roads.

7.8 Modular Homes:

1. Modular homes must comply with county, state, and federal regulations.

7.9 Marinas:

1. Location and Conditions:
   a. The site of a proposed marina shall not make significant alterations or disturbances of existing natural topography or features such as stands of mature trees, stream courses, wetlands, or inland bedrock outcroppings.

   b. The marina shall be adequately screened from adjacent uses as determined by the Planning Board during Site Plan Review.

2. Marina Design:
   a. The front setbacks of the District do not apply for typical marina activities such as, pump-out facilities, docks, gas pumps, boat hoist, dockside supply facilities, or bathhouse.

   b. All other setbacks apply to additional activities of the property.

3. Access and Parking:
   a. The marina shall provide for safe, legal means of access from one or more public roads as per the requirements of Site Plan Review.

4. Service Buildings:
   a. Service buildings housing sanitation and/or laundry facilities shall be permanent structures complying with all applicable ordinances and statutes regulating buildings, electrical installations, plumbing and sanitation systems.

5. Fire Protection:
   a. Open fires shall not be permitted.

   b. The use of outdoor grills for the preparation of food is permitted.

6. Boat Sales and Storage:
   a. The area should be described in detail on the Site Plan Review application and is subject to Planning Board approval.

   b. If vertical storage is allowed, the length of the storage facility must be perpendicular to the shoreline.

7.10 Seasonal Recreational Resorts:

1. Intent:
   In order to take maximum advantage of the unique characteristics of this area, a designation of Recreational Resorts is established for campgrounds and RV parks.

2. The term Recreational Resort shall be construed to include all related functions normally associated with transient resorts, such as, but not limited to:
    a. Tent camping sites
    b. RV camping sites
    c. Seasonal motor home sites
    d. Cabins, motel units
    e. Bathhouse, restroom facilities
    f. Marinas
    g. On-site convenience stores
    h. On-site laundromat
    i. Swimming pools
    j. Swimming beaches
    k. On-site recreation such as golf
    l. Restaurant

3. All applicable local, county, and state regulations shall be followed.

4. Boundaries:
    a. All seasonal, dwellings including patios, porches, or garages, office building, dwelling and ancillary use buildings associated with the recreational park shall be contained within the Lot Utilization Area.

        For recreational parks, this area is defined by the greatest of the following boundaries:

        1) The front lot setback line for the district or a minimum of 150 feet from the center line of any public road.

        2) The side yard setback line for the district or a minimum of 10 feet from the side yard lot line, whichever is greater.

        3) The rear yard setback line for the district.

5. Site Size:
    Each site, excluding tents, shall satisfy the following requirements:

    a. Minimum site size shall be 1,250 square feet.

    b. Minimum site width shall be 25 feet.

    c. Minimum site length shall be 50 feet.

    Tent sites shall be a minimum of 500 square feet.

6. Site Spacing:
    a. All dwellings, patios, and ancillary use structures including but not limited to: garages storage sheds, located on the same site shall be within the site utilization area. The site utilization area is defined as the area within the site bounded by the following:

1) Front site utilization line shall be a minimum of 30 feet from the centerline roadway on which it is located.

2) The side site utilization lines shall be a minimum of 10 feet from the site side line.

3) The rear site utilization line shall be a minimum of 20 feet from the rear site line.

7. Parking spaces:
Parking areas may be grass or all-weather material, e.g. gravel, paved, etc.

8. Landscaping:
The Lot Exclusion Area shall be a green zone and landscaped with grass, shrubs, and trees and maintained to provide visual screening from adjacent properties and public roads.

7.11 Recreational Vehicles:

1. A single (one) recreational vehicle or travel trailer with a current registration, on an owner's lot shall, by permit obtained from the Zoning Officer, be allowed. Such permit will be issued after the applicant presents evidence of the following conditions:

A. Adequate water supply

B. Adequate sewage and gray water disposal, in accordance with county and state codes.

C. Electric service in accordance with county and state codes.

D. Lot size and lot utilization shall comply with the requirements for a single family dwelling in the district where the Recreational Vehicle is located.

2. Recreational Vehicles occupied for 30 days or more, in a 365 day period, shall require a permit reviewed annually by the Zoning Enforcement Officer.

3. Recreational Vehicles are not permitted for use as a storage container.

4. Recreational Vehicles are not permitted for year round occupancy.

5. Unoccupied Recreational Vehicles or those occupied for less than 30 days in a 365 day period, shall be considered accessory use.

6. Long term storage (2 years or more) shall not be permitted.

7. Recreational Vehicles in a Seasonal Home Park are exempt from section

7.12 Rental Dwelling Units:

1. The gross lot density shall not exceed one unit per 3,000 square feet of lot area.

2. The minimum distance between building units shall be 15 feet.

3. There should be 2 parking spaces per dwelling unit and an improved parking area that complies with the requirements of the District that the units are located.

4. Access for emergency vehicles must be ensured at all times.

5. Sale of any individual rental unit and associated land requires approved subdivision by the Planning Board.

7.13 Solar Energy Conversion Systems – (SECS)

1. Authority:
The Solar Energy Conversion section of the Town's Zoning Law is adopted pursuant to sections 261-262 of Town Law of the State of New York which authorizes the Town of Cape Vincent, "to make provision for, so far as conditions may permit, the accommodation of solar energy systems and equipment and access to sunlight necessary therefore".

2. Intent:
This section is adopted to advance and protect public health safety, and welfare within the Township by creating regulations for the installation and use of solar energy conversion systems (SECS) with the following objectives:
a. To take advantage of a safe, abundant, renewable and non-polluting energy source.
b. To locally supplement existing sources of commercial power.
c. To decrease the cost of electricity to the owners of residential and commercial properties, including single-family homes.
d. To encourage investment in public infrastructure supportive of solar energy, such as conversion system arrays, grid-scale transmission infrastructure, even energy storage sites, and
e. To mitigate the impacts of SECS on scenic and natural resources, especially important agricultural lands, sensitive wetlands designated by the DEC, forests, wildlife, and other protected resources.

3. Cape Vincent, Town and Village adopt solar:
In the past few years, both Town and Village Trustees have entered into inter-governmental compacts to facilitate pool or contracted electricity pricing and usage and/or assistance with solar conversion system acquisitions through State or Federal grant programs. Both

Cape Vincent governments belong to The Tri-County Solar Consortium and the area School and Municipal Energy Cooperative. Electricity for Town-owned properties is purchased at a discount while the Village has installed its own solar array, conversion and energy management equipment with a 100KW or better capacity. This system is sited near the sewage treatment facility. Electricity costs associated with that operation, Village street lighting and all other owned buildings have been reduced significantly.

4. Solar Energy Conversion Systems:

Included herein are all the components and subsystems required to convert solar energy into electric energy suitable for use. The term includes, but is not limited to, photovoltaic collectors (solar panels and newly developed roofing and exterior cladding materials), inverters which convert the collected Direct Current (DC) power to conventional Alternating Current (AC) power, and associated circuit breaker and power management systems (with back-feed protection) which tie into the commercial grid. A Solar Energy Conversion System is classified TIER 1, TIER 2, and TIER 3A or TIER 3B.

a. TIER 1 Solar Energy Conversion Systems include:

- Roof-Mounted solar panels
- Building-integrated solar energy collection roofing or other exterior materials which contain photovoltaic properties.

The TIER 1 designation would typically apply to systems which are designed to supplement a site's energy needs or in the event of a commercial service outage. The designed output of TIER I systems are currently limited by the commercial grid operator, National Grid, to 110% of annualized residence/parcel electricity consumption or maximum of 25KW (kilowatts).

b. TIER 2 Solar Energy Conversion Systems also provide emergency electricity back-up when there is a grid outage. In this configuration solar panels are ground mounted and also limited to 110% of electricity consumption or 25KW output. TIER 2 systems may be comprised of fixed, rack-mounted solar panels and/or the more efficient pedestal-mounted, sun-tracking solar arrays.

c. TIER 3 Solar Energy Conversion Systems are typically large-scale applications whose electricity production is primarily for offsite consumption. These projects are best suited on land which is adjacent to an overhead electrical transmission system with the capacity to handle the generated output. (see Hosting Capacity in section 5 below).

There are two types of TIER 3 SECS:

-TIER 3A Solar Energy Conversion Systems are those with a design capacity exceeding 25KW, but less than 25 MW (megawatts).

-TIER 3B are SECS which exceeds 25MW.

Descriptions:
TIER 3A are SECS which are varied in their footprint (land) requirements and intended commercial use. An example would be of a developer whose intention would be to sell the SECS output within the Township via a subscription plan. There could also be a cooperative agreement with similar projects in adjoining Townships.

TIER 3B SECS with design capacity exceeding 25MW are considered commercial or utility-scale projects and are permitted by the Board of Electric Generation Siting and the Environment Siting Board under Article 10 of the New York State Public Service Law.
This does not preclude the Township's right and responsibility to promulgate permitting requirements for Commercial/Utility-grade SECS exceeding 25MW and embody such in its Zoning Law. Under Article 10, the Siting Board is charged with taking into consideration the reasonableness of local zoning regulations during its review. The project applicant has the responsibility to establish which, if any, of the local zoning regulations pertaining to SECS are unduly burdensome.

Section 9 below will outline the requirements for both TIER 3 size SECS.

5. Hosting Capacity:
   There is now a tool by which a developer and a Township can assess the general feasibility of TIER 3 projects by reviewing the servicing utility's (National grid's) mapped estimate of the amount of new distributed electricity generation that may be interconnected at a particular part of the of the distribution (the existing, overhead power lines and related equipment) without adversely impacting power quality or reliability under current configurations and without requiring expensive infrastructure upgrades. Access to these "Hosting Capacity" maps can be requested through cleanenergyhelp@nyserda.ny.gov.

6. Applicability:
   A. The requirements of the Solar Energy Conversion section of the Zoning Law shall apply to all Solar Energy systems permitted, installed, or modified in the Town of Cape Vincent upon the effective date the revised Zoning Law is formally adopted.
   B. Solar energy conversion systems constructed and/or installed prior to the effective date of these regulations shall not be required to meet the requirements of this section of the Zoning Law.
   C. Modifications to an existing solar energy conversion system that increases the area or footprint of the solar array(s) by more than 5 % (of the original area), exclusive of moving any fencing shall be subject to the regulations is this section.
   D. Currently, New York State does not license Photovoltaic (PV) installers. However, NYSERDA maintains a listing of professionals who are credentialed by the North American Board of Certified Practitioners (NABCEP) and/or the International Brotherhood of

Electrical Workers and National Electrical Contractors Association (IBEW-NECA). At a minimum, all solar energy conversion systems shall be designed, erected, and installed in accordance with all applicable codes, regulations and industry standards to include: the NYS Uniform Fire Prevention and Building Code, National Fire Prevention Association Code 70 Standards, and the National Electric Code (NEC) Standards.

7. Permitting Requirements for TIER 1 Solar Energy Conversion Systems:

A. Roof-mounted SECS are permitted in all zoning districts when attached to any lawfully permitted residence or ancillary building. A valid zoning permit shall be obtained through the Town of Cape Vincent Zoning Enforcement officer prior to installation.

B. Additionally, roof-mounted SECS require that the installer obtain a building permit. All work shall be completed in accordance with the NYS Uniform Fire Prevention and Building Code and the National Electric Code.

C. Design requirements for roof-mounted SECS:

- Height. Roof-mounted SECS shall not exceed the maximum height restrictions of the zoning district with which they are located and are provided the same height exemptions granted to building-mounted mechanical devices or equipment.
- Solar panels on pitched roofs shall be mounted with a maximum distance of 8 inches between the roof surface and the highest edge of the system.
- Solar panels on pitched roofs shall be installed parallel to the roof surface on which they are mounted or attached.
- Solar panels on flat roofs shall not extend above the top of the surrounding parapet, or more than 24 inches above the flat surface of the roof, whichever is higher.
- All solar panels shall have anti-reflective coating(s) to reduce glare.

D. Building-Integrated Solar Energy Conversion Systems are exempt from area requirements and design standards because they are integrated into the building envelope systems themselves. These include vertical facades made of glass, semi-transparent skylight systems, special roofing materials and window shading elements. Building-Integrated SECS shall be shown on the plans submitted for the building permit application for the building containing the system.

8. Permitting Requirements for TIER 2 Solar Energy Conversion Systems:

A. All TIER 2 SECS which use generated electricity, generally on-site,

are allowed in the Agricultural District with a zoning permit. Within all other Districts, Site Plan Review by the Planning Board shall be required.

B. Glint and glare. All TIER 2 SECS shall be located in a manner to reasonably avoid and/or minimize blockage views from adjacent properties and shading of property to the North. Care shall be taken to orient to the extent practicable these SECS to minimize glare on adjacent properties and roadways. All solar panels utilized in in TIER 2 SECS shall have anti-reflective coatings applied.

C. Height and Setback. Ground-mounted SECS with fixed racking shall not exceed 10 feet in height. Pedestal-mounted SECS with sun tracking equipment shall not exceed 17 feet in height. All ground-mounted (including pedestal) SECS shall adhere to side and rear setback requirements of the respective zoning districts. Front yard, ground-mounted SECS (including pedestal) shall be allowed only in the Agricultural District.

D. Lot Coverage. The surface area covered by a ground-mounted SECS shall be limited to 40 percent of a lot's total footprint.

9. Permitting Requirements for TIER 3A&B Solar Energy Conversion Systems:
   A. Large-scale Energy Conversion Systems are permitted through the process of Site Plan Review within the Agricultural Residential (AR) District only. Applications for the installation of TIER 3A&B shall be Submitted to and reviewed by the Zoning Enforcement Officer and Referred, with comments, to the Planning Board which shall initiate the Site Plan Review process. Essential elements of an application are:

      -All TIER 3A&B SECS shall be designed by a NYS licensed architect or licensed engineer and installed in conformance with the NYS Uniform Fire Prevention and Building Code, National Fire Prevention Association Code 70 Standards and the National Electric Code Standards.

      -All solar collectors and related components shall be sited in Compliance with NYS Department of Environmental Conservation (DEC) and Federal flood plain regulations as they pertain to waterways, waterbodies, and designated wetlands.

B. Applications for TIER 3 A&B Site Plan Review shall include:

1. If the proposed project includes leased parcels, legal consent between all parties, specifying the use(s) of the land for the duration of the project, including easements and other agreements shall be submitted.

2. Full plan sets including applicable solar panels, inverters

control/disconnect and battery back-up equipment depicting the layout and installation of the SECS signed by a licensed engineer or architect shall be submitted.

3. SECS Operations, Maintenance, Safety and Security Plan. This plan shall describe normal operations procedures, maintenance protocols, security monitoring and incident/accident response measures involving the TIER 3 SECS operator and local emergency responders.

4. Decommissioning Plan and Abandonment. To ensure that TIER 3A&B SECS are safely disassembled and removed from the sited sited property(s), the owner shall submit a decommissioning plan. It shall consider the normal, life-cycle expectancy of the project and planned removal or a circumstance where a prolonged shutdown occurs for unexpected reasons.
   In either case, the owner shall have no more than twelve (12) consecutive months to remove all installed equipment, including foundations, and remediate soil conditions to its pre-project state. The plan shall also include time-line/activity benchmarks within the anticipated removal period.
   The plan shall also include cost estimates, adjusted for inflation, for all decommissioning phases prepared and submitted by a professional engineer or contractor.
   If the SECS is not fully disassembled, removed and land remediated with the allowable 12-month period, the Town of Cape Vincent reserves the right to remove the system, restore the property take any and all legal steps to compensate itself for expenses incurred.

5. Special criteria for TIER 3 A&B SECS applications:

   A. Height. TIER 3 A&B SECS shall not exceed seventeen (17) feet in installed height independent of differences in terrain contours. This height maximum shall apply to both ground based, fixed rack and panel installations and pedestal mounted 'tracker systems."

   B. Setbacks.
   TIER 3 A&B SECS shall adhere to the setback requirements stipulated in the Zoning Law for the Agricultural Residential District except that solar panel arrays and related equipment or structures shall be located at least one hundred (100) feet from any lot containing a single or multi-family residence.
   AND
   Setbacks from road (as measured from the centerline) requirements are As follows:
   - State Route 12E along the River District shall be 1000 feet.

- State Route 12E from the Cape Vincent village line to the Town of Lyme (Town) line shall be 500 feet.
- All other County and Town roads shall be 250 feet.

C. Visual Assessment/Landscaping and Screening Plan(s)

TIER 3A&B SECS with a footprint smaller than ten (10) acres shall have views from adjacent properties minimized to the extent reasonably practicable by employing architectural features, earth berms, landscaping or other screening methods that shall be in keeping or "harmonize" with the character of the property and surrounding area.

Applicants with TIER 3A&B SECS larger than ten (10) acres shall be required to:

1. Conduct a visual assessment of the visual impacts of the SECS on public roadways and adjacent properties. At a minimum, a line-of-sight profile analysis shall be provided to the Planning Board. Depending upon the scope and potential significance of the visual impacts, additional study and analysis including a digital view-shed report may also be required from the applicant.
2. Submit a screening and landscaping plan which preserves existing trees and vegetation which would border the solar project and public roads and adjacent properties. Where existing, natural screening features do not exist, or need to be supplemented, the plan shall also topographically depict the locations for additional plantings proposed by the applicant, plant species, height at maturity, distance between plants and other material features which will comprise the screening plan. At a minimum, one (1) evergreen tree, at least six (6) feet tall at time of planting, plus two (2) supplemental shrubs shall be planted within each ten (10) linear feet between a public roadway and the outside perimeter of the installed solar panel array(s). The Planning Board shall select type(s) of evergreen trees and supplemental plants from options provided by the applicant.

D. Fencing/Signage

All TIER 3A&B SECS shall be enclosed (between the solar array(s)and the natural or supplemented screening) by fencing of sufficient size and composition to prevent unauthorized access.

Additionally, all inverter, circuit breaker, battery, grid ti-in and disconnect systems which are located in ancillary building(s) shall also be enclosed by security-grade fencing and locking systems in accordance with provisions of the National Electric (NEC) Code, the NYS Uniform Fire Prevention and Building Code and the National Fire Prevention (NFPA) Code 70 Standards.

Electrical hazard/warning signage of appropriate size, format, frequency shall be placed on the fencing. The owner and/or SECS operator's emergency contact information must be clearly identifiable on warning signage.

E. Glint and Glare.
All solar panels shall be placed and arranged such that reflected solar radiation/glare shall not be directed onto nearby buildings, properties or roadways. Exterior surfaces of all collectors and related equipment shall have a non-reflective coating/finish.
Particular attention shall be paid to solar panel orientation with regard to aircraft flyover/approach patterns to minimize potential glare impacts on pilots who utilize the Watertown International Airport and Wheeler Sack Army Airfield. All TIER 3A&B applicants shall provide documentation that senior managers representing both airfields have been apprised of the planned SECS installations and that if Glint and Glare studies regarding impacts on local aviation are required, the applicant has fully cooperated and has provided such reports.

F. Noise.
Noise producing equipment such as inverters and sub-station equipment shall be housed and/or located within the project footprint to minimize noise impacts on adjacent properties. Their setback from property lines should achieve no discernible difference from existing noise levels at the property line.

G. Access and parking.
TIER 3A&B projects shall be designed with roadway entrances and interior access roadways to ensure that fire, ambulance and other emergency service vehicles can achieve a timely incident response. Parking areas should be adequate for personnel and equipment marshaling needs during construction and maintenance during normal operations.

H. Safety.
The Applicant shall provide a copy of all pertinent design schedules, i.e. the layout of all PV panels, wiring schematics for connections to inverter requirement, circuit disconnects, and tie-ins and disconnects to utility systems to the Town of Cape Vincent Fire and Ambulance Services. Similarly, these Services will also be provided with interior access and road maps to facilitate emergency responses. If the project includes batteries for back-up power storage, Material Safety Data Sheets (MSDS) for the batteries and their construction components will be made available to these Services.

Applicants representing TIER 3A&B SECS shall provide from the Cape Vincent Volunteer Fire Department and Cape Vincent Volunteer Ambulance Squad that each unit's senior managers have reviewed pertinent site plan schedules. Their comments/concerns shall be recorded in the Planning Board project record. To that end, all non-automatic/over-ride means of shutting down a TIER 3A&B SECS shall be clearly marked on the Site Plan, building permit applications, and at the site of the the SECS's primary control building/station.

I. Supplemental Conditions.
The Town of Cape Vincent Planning Board may impose additional conditions for Site Plan Review and approval under this Section of the Town Zoning Law in order to reasonably discharge its obligations under the State Environmental Quality Act (SEQR).

7.14 Tall Structures Applications:

1. Intent:
The intent of this section is to describe the requirements of Tall Structures.

Classification of Tall Structures:
The five classes of tall structures are:

a. Elevated Water Storage and Pressure Regulating Facilities (EWSPR) – Section 7.14.5

b. Telecommunication Towers (TT) – Section 7.14.6

c. Meteorological Towers – Section 7.14.7

d. Wind Energy Conversion Systems (WECS) – Section 7.14.8

e. Small Wind Energy Conversion Systems- Section 7.14.9

The Town's Joint Comprehensive Plan for the Village and Town of Cape Vincent 2012 specifically discourages: "*Any industrial, commercial, or utility development whose influence would have a negative impact on health, safety, scenic and natural resources, property values, recreational opportunities, and tourism assets.*" It more specifically discourages: "*Tall structures, including telecommunication towers, FM Broadcast towers and industrial wind turbines.*"

Current industrial Wind Energy Conversion Systems (WECS) are now more than 400 feet in height with some exceeding 500 feet. These structures will have far greater impact on rural, scenic vistas, and view sheds than existing telecommunication towers, not only because of their

greater height and numbers, but also because of their movement, which attracts viewer attention. Turbine height, movement, and the numbers of turbines also pose a risk to avian species moving along the Town's Coastal Migratory Corridor. Moreover, industrial WECS operation have health and safety impacts on people that must be addressed with adequate setbacks for ice throw, rotor failure, shadow flicker, and noise.

2. Applicability:
This Law shall apply to all of the land located within the Town of Cape Vincent. This Section governs structures over 60 feet high and associated land including, but not limited to, non-municipal water towers, FM broadcast towers, telecommunication towers, wind energy conversion systems (WECS), interconnecting and transmission systems as well as small wind energy conversion systems (SWECS). No building, structure, or land shall be used, occupied or altered, and no building, structure, or part thereof shall be erected, constructed, reconstructed, moved, enlarged, or structurally altered, unless it is in conformity with all the provisions of this Law and all other applicable regulations, except as otherwise provided by this Section.

3. Exceptions:
Specific structures, including church steeples, silos, tower, or poles used to support utility lines are excluded from these regulations. Only federal, state or county law shall override these requirements.

4. General Requirements:

   a. Each type of tall structure has specific location limitations and requirements. These limitations and requirements are related to the purpose and height of the tall structure and are detailed in the paragraphs dealing with the specific type of tall structure.

   b. Tall structure height is measured from the lowest adjacent grade to the highest point of the structure, including any attachments, such as a lightning protection device, or a turbine rotor, or tip of the turbine blade when it reaches its highest elevation.

   c. The diameter of the tall structure is determined at the extremity of the structure, including foundations, producing devices, turbine blades, etc.

   d. Unless specifically required by other regulators, a tower shall have a finish (either painted or unpainted) that minimizes visual impact.

   e. Unless required by the Federal Aviation Administration, no night lighting of towers for the personal wireless facilities is permitted, except for manually operated emergency lights for use only when operating personnel are on site. In instances when night lighting is required by law and, in which case, such lighting shall be of such type as to minimize glare.

   f. Visual/Aesthetic:

Towers shall, when possible, be sited where their visual impact is least detrimental to highly rated scenic and historic areas, including the Seaway Trail and properties listed in the State and Federal Registers of Historic Places.

A visual impact assessment shall be defined according to the class of Tall Structures.

1) A zone of visibility map that illustrates the entire area from which the tower will be visible.

2) Photographs shall be taken from a reasonable number of key viewpoints within the Town, specified by the Planning Board during Site Plan Review including, but not limited to, state highways and other major roads, state and local parks, preserves and historic sites and other locations where the site is visible to a large number of residents, visitors, or travelers.

3) Applicants will fly a balloon or other device at the maximum height of the proposed tower for three (3) days prior to the first public hearing, and for four (4) days immediately following the first public hearing held on the proposal to aid residents in visualizing the height of the proposed tower.

g. Site Plan Review Required

h. Environmental Degradation:
Towers shall, when possible, be sited to avoid affecting the avian migratory corridor and rare or endangered flora or fauna. They should also be sited, when possible, away from wetland area.

i. Road/Access for all classes of Tall Structures excluding SWECS:
For all tower sites, the roads or other means of access, such as dirt roads, leading to and from same shall be inspected and approved by the Town's Engineer and Highway Superintendent before any Certificate of Compliance is issued for the construction of the tower. All roads leading to the tower shall be adequate for access for emergency and service vehicles on a year-round basis. Maximum use of existing roads, public or private, shall be made. Road construction shall be consistent with standards for private roads as required by the Town. The road grade shall closely follow the natural contour so as to assure minimal visual disturbance and reduce soil erosion potential.

j. Building Operations and Maintenance
The applicant will comply with all State and Federal regulations for the specific class of Tall Structure.

k. Notification for all classes of Tall Structure excluding SWECS

An applicant proposing of a Tall Structure shall mail notice of application filing and the Planning Board's scheduled public hearing(s) directly to all landowners whose property is located, wholly or in part, within 500 feet of the property line of the proposed host parcel (s). Notification in all cases shall be made by certified mail at least ten (10) days prior to the scheduled Planning Board meeting. Documentation of the foregoing notification shall be submitted to the Planning Board prior to the public hearing.

l. Decommission Plan: Refer to Section 5.4.8, pages 28 and 29.

m. Decommission Fund:-Refer to Section 5.4.9, page 29

n. Permit Revocation:
Each tall structure shall be maintained in operational conditions at all times, subject to reasonable maintenance and repair outages. Should a violation of the Zoning Permit occur, remedial action will be in accordance with Section 5.8, Violations and Penalties, of this Law.

7.14.5 Elevated Water Storage and Pressure Regulation Facilities (EWSPR)

a. The Town recognizes that manufacturing facilities have needs for constant water pressure and/or constant water volume. If those needs are not available from a Town water district source, the manufacturer would have no choice other than to build a privately owned EWSPR. Due to the potential impact on neighboring properties and safety, the following regulations apply.

b. Additional Information:
In addition to the requirements for a Special Use Permit and Site Plan Approval, refer to Site Plan Approval Section 5.4.6, pgs. 23-29, the applicant shall provide the following information with the application.

1) Tower usage plan which identifies the type of use, level of use, and any characteristics of the tower which may affect the surrounding area. The tower usage plan shall also outline construction.

2) New towers shall be the minimum height necessary to provide adequate pressure/volume.

c. Site Requirements:
Towers and ancillary facilities shall be located so as to minimize potential adverse impacts as follows:

1) Safety:

Towers and ancillary facilities shall be located a sufficient distance from adjoining property lines and adjoining structures so as to safeguard against damages from ice fall or debris from structural damage.

2) Visual/Aesthetic:
Towers shall, when possible, be sited where their visual impact is least detrimental to highly rated scenic and historic areas, including the Seaway Trail and properties listed in the State and Federal Register of Historic Places.

3) Setback:
Tower setback is to be determined by the amount of water, height of water by the town engineer.

7.14.6 Telecommunication Towers (No Rotating Parts)

a. Intent:
The purpose of this section is to regulate the siting of telecommunication towers and related uses consistent with applicable federal and state regulations; to minimize the total number of telecommunication towers in the Town by encouraging shared-use of existing and future towers; and to minimize the adverse visual effects of towers by requiring careful siting, visual impact assessment, and appropriate landscaping in order to protect the natural scenic features, such as the Seaway Trail, rolling farm land, wetlands, property values, and the aesthetic character of the Town of Cape Vincent. These provisions are not intended to prohibit or have the effect of prohibiting the provision of personal wireless services nor shall they be used to unreasonably discriminate among providers of functionally equivalent services consistent with current federal regulations.

b. Applicability:
No new telecommunication towers may be built nor any existing telecommunication towers modified except in accordance with this Section.

c. Additional Information:
In addition to the requirements for a Special Use Permit and Site Plan Approval, refer to Site Plan Approval Section 5.4.6, pgs. 23-29, the applicant shall provide the following information in connection with its application:

1) A site plan that shows all existing and proposed structures and improvements, including antennas, roads, buildings, guy wires and anchors, parking, and landscaping and

grading plans for new facilities and roads. Any methods used to conceal the modification of an existing facility shall be indicated on the site plan.

2) Tower usage plan which identifies the type of use, level of use, and any characteristics of the tower which may affect the surrounding area. The tower usage plan shall also outline construction methods and removal plans in the event the tower usage is discontinued.

3) A map of areas of telecommunications coverage already in place within the Town, demonstrating through overlay zones the technological necessity of the proposed tower at the site to provide the type of service.

4) A letter of intent committing the tower owner and his/her successors in interest to notify the Chair of the Planning Board within fifteen (15) days of the discontinuation of use of the tower.

d. Shared Use of Existing Towers:

The Town is strongly in favor of minimizing the degradation of the visual environment caused by telecommunications towers. At all times, use of existing towers and existing sites shall be required under the following guidelines:

1) In all cases where an application has been made for the construction of a new tower, an applicant shall present an adequate report why existing towers cannot be used.

2) In the case of new towers, the applicant shall submit a report documenting capacity for future shared use of the proposed tower.

3) An applicant intending to share use of an existing tower shall document approval from an existing tower owner to shared use.

e. New Tower Design:
The design of a new tower shall comply with the following:

1) Any new tower shall be designed to accommodate additional shared use by other telecommunications providers.

2) New towers shall be below the height requiring FAA lighting.

3) If required by the FAA, all lighting should be the most advanced technology to minimize impact.

f. Site Requirements:
Telecommunications towers and ancillary facilities shall be located so as to minimize potential adverse impacts as follows:

1) Safety:
Telecommunication towers and ancillary facilities shall be located a minimum of two times the tower height from adjoining property lines and adjoining structures so as to safeguard against damages from ice fall or debris from structural damage.

2) Inspections and Tower Use Reports:
An agent of the Town shall be entitled to inspect the telecommunication tower and ancillary facilities upon completion of construction and at least one time annually thereafter. The owner/applicant shall deliver to the Planning Board, as a condition of site plan approval hereunder, written permission for access to the facility and such tower to inspect the tower and determine compliance with the tower usage plan, as well as its structural integrity at any time.

g. Prior to being granted site plan approval, the applicant shall submit to the Planning Board a Decommissioning Plan that is accordance with applicable Decommissioning requirements cited in Sections 8 and 9, pages 29 and 30.

7.14. 7 Meteorological Towers:

a. Intent:
Meteorological towers may be allowed through a Site Plan Review in the Agricultural District of the Town as long as they comply fully with requirements of this Law. A Site Plan Review is required (refer to Site Plan Review Section 5.4.6, pgs. 23-29). It is the intent of this Law that Meteorological Towers are temporary structures.

b. Applications for temporary permits for Meteorological Towers subject to this Law may be jointly submitted with the application for a WECS.

c. Meteorological Tower Requirements:

1) The distance between a Meteorological Tower and the property line shall be at least 1 1/2 times the total height of the tower.

2) Meteorological Towers shall comply with FAA lighting.

7.14.8 Wind Energy Conversion Systems (WECS) Greater Than 60kw

a. Intent:

The Town Board of the Town of Cape Vincent recognizes the increased demand for alternative energy throughout the State. Although the Town's preferred alternative energy technology is solar, the purpose of this Section is to protect citizens from any potential negative impacts associated with WECS and also to protect the Town's highly valued properties along the Lake and River from property devaluation associated with proximity to WECS. Restricting WECS away from waterfront locations will also help protect the important avian migration corridor along the Town's lake and river waterfronts.

1) Applicability:

This Section shall apply exclusively to Wind Energy Conversion Systems (WECS), proposed, operated, modified, or constructed within the municipal boundaries of the Town. No new WECS, may be built nor any existing WECS modified except in accordance with this Section. Any new WECS development shall also comply with all regulations and restrictions within this Section as well as Noise regulations, Section 6.7, Noise pgs. 34-38.

2) Site Plan Review:

WECS shall be constructed, reconstructed, modified, operated, or replaced in the Town by first obtaining a Special Use Permit from the Zoning Board of Appeals and Site Plan approval of the Planning Board. Refer to Site Plan Review 5.4.6, pgs. 23-29.

3) Specific Site Plan Review Application Requirements:

A complete Site Plan Review application for a WECS, shall include:

(a) A description of the project, including the number, model, specifications, and maximum rated power output capacity of each unit.

(b) For each WECS proposed, a plot plan prepared by a licensed surveyor or engineer drawn in sufficient detail to clearly describe the following:

1. Property lines and physical dimensions of the site.
2. Location, dimensions, and types of existing structures and uses on site, public roads, and adjoining properties within a 3,000-foot radius of the proposed WECS.
3. Location and ground elevation of each proposed WECS.

4. Location of all existing above and below ground electric utility lines on the site and all related transformers, power lines, interconnection points with transmission lines, communication lines, and other ancillary facilities or structures.
5. Location and size of structures above 35 feet within a 3,000-foot radius of the proposed WECS. For purposes of this requirement, electrical transmission and distribution lines, antennas, and slender or open-lattice towers are considered structures
6. Location of all existing gas, water, and sewer lines.
7. To demonstrate compliance with the setback requirements of this Law, circles drawn around each proposed tower site having a radius equal to:
   A. Six (6) times the total height of the proposed WECS.
   B. Distance associated with compliance with Noise Regulation from Section 6.7.; to include a table of predicted noise levels keyed to each property line within 1.5 miles of a WECS.
   C. Location of the nearest residential structure on site and off site, and the distance of each from the proposed WECS.
   D. All proposed facilities, including access roads, electrical lines, substations, temporary or permanent storage, or maintenance facilities, and fencing.
   E. The names and addresses of all property owners within a 1.5-mile radius of each WECS, together with a description of the current use of all such property and keyed to the map and table of predicted noise levels.
   F. Elevation drawing of the WECS showing total height, turbine dimensions, tower and turbine colors, distance between ground and lowest point of any blade, and access doors. One drawing may be submitted for each WECS of the same type and total height.
   G. Lighting Plan: showing any Federal Aviation Administration (FAA) required lighting and other proposed lighting. The application should include a copy of the determination by the FAA to establish required markings and/or lights for the structure, but if such determination is not available at the

time of application, no permit for any lighted facility may be issued until such determination is submitted.

H. Radar-Controlled Lighting: To minimize nighttime annoyance from a WECS lighting array, a radar-based activation system is required, if available.

I. Environmental Degradation:
Towers shall, when possible, be sited to avoid affecting the avian migratory corridor and rare or endangered flora or fauna. They should also be sited, when possible, away from wetland area.

J. Existing Vegetation:
Existing on-site vegetation shall be preserved to the maximum extent possible.

K. Parking:
Parking that assures adequate spaces for emergency and service vehicles shall be provided. The Planning Board shall determine the number of required spaces based on a recommendation from the applicant.

(c). Decommissioning Plan and Fund: Refer to general decommissioning plan and fund as specified in Section 8 and 9, pgs. 28 and 29.

(d). Complaint Resolution Plan: A Complaint Resolution Plan to address complaints within 24 hours of receipt of notice by the Owner/Operator of the WECS and to resolve any complaint in a diligent and timely manner under the circumstances. The Plan should at a minimum comply with the process described in Section 6.7, Noise, pgs. 34-38, and as determined by Site Plan Review.

4. Information relating to the construction/installation of the WECS as follows:

1) A construction schedule describing commencement and completion dates of the project and beginning and ending hours of daily construction.

2) A description of the routes to be used by construction and delivery vehicles, the gross weights and heights of those loaded vehicles must comply with New York State Department of Transportation regulations.

3) Completed Part I of the full Environmental Assessment Form (EAF).

4) For each proposed WECS, include make, model, picture, and manufacturer's specifications, including detailed estimates of sound power levels for wind speeds over the entire operational range of the WECS. Include Manufacturer's Material Safety Data Sheet documentation for the type and quantity of all materials used in the operation of all equipment including, but not limited to, all lubricants and coolants.

5) If a positive declaration of environmental significance is determined by the SEQR lead agency, the following information shall be included in the Draft Environmental Impact Statement (DEIS) prepared for a WECS. If the lead agency issues a Negative Declaration of environmental significance following its review of the EAG, an amended application shall be submitted which shall include, at a minimum, the following information:

(a) Shadow Flicker: The applicant shall conduct a study on potential shadow flicker. The study shall identify locations where shadow flicker may be caused by the WECS and the expected durations of the flicker at these locations. For residences, the zone for predicting shadow coverage shall include the area within a 100-foot radius of the center of the residence. The study shall identify areas where shadow flicker may interfere with residences or highways and detail measures that will be taken to mitigate or eliminate such interference.

(b) Visual Impact: Applications shall include a visual impact study of the proposed WECS as installed, which shall include a computerized photographic simulation, demonstrating any visual impacts from strategic vantage points, to include a detailed array from a number of vantage points along the Town's lake and river waterfronts. Color photographs of the proposed site from at least two locations accurately depicting the existing conditions shall be included. The visual analysis shall also indicate the color treatment of the system's components and any visual screening incorporated into the project that is intended to lessen the system's visual prominence.

(c) Fire Protection/Emergency Response Plan: A fire protection and emergency response plan, created in

consultation with the fire department(s) having jurisdiction over the proposed WECS to address coordination with local emergency/fire protection providers during any construction or operation phase emergency, hazard, or other event.

(d) Noise Study: A certified acoustical consultant shall predict Wind Turbine noise levels keyed to all residences within 1.5 miles of a WECS. The noise analysis shall comply with requirements noted in Section 6.7, pgs. 34-38, Noise.

(e) Electromagnetic Interference: An assessment of potential electromagnetic interference with microwave, radio, televisions, satellite systems, personal communication systems, and other wireless communication, weather and other radar shall be prepared. The applicant/operator is responsible for the preparation, assessment, and any corrective measures.

(f) Cultural, Historical, and Archeological Resources Plan: An analysis of impacts on cultural, historical, and archeological resources shall be prepared regarding impacts anticipated during construction, modification, or operation of each WECS. This assessment shall be conducted in concert with the New York State Office of Parks, Recreation, and Historic Preservation.

(g) Wildlife Impact: An analysis of impact on local wildlife and the Town's critical environmental areas shall be prepared to assess the anticipated impact during construction, reconstruction, modification, or operation of each WECS. Wildlife impacts to be considered shall include, at a minimum, anticipated impact on birds and bats as well as wildlife inhabiting ground-level habitats. The scope of such assessment shall be developed in consultation with the New York State Department of Environmental Conservation and the United States Fish and Wildlife Service and shall adhere to the "USFWS Land-Based Wind Energy Guidelines, March 23, 2012" to assess suitability of the site, and, if application is approved, outline post-operational studies to assess impacts.

(h) Operation and Maintenance Plan: An operation and maintenance plan providing for regular periodic WECS inspection, any special maintenance requirements and procedures through decommissioning, and notification requirements for restarts during icing events.

(i) Stray Voltage Report: An assessment, pre- and post-installation, of possible stray voltage problems on the site and neighboring properties within one (1) mile of the project boundary to show what properties need upgraded wiring and grounding. The applicant/operator is responsible for assessment and any corrective measures.

(j) The applicant shall, prior to the receipt of a Special Use Permit, provide proof that it has executed an Interconnection Agreement with the New York Independent System Operator and the applicable Transmission Owner. Applicant shall also provide proof of complying with Public Service Commission power purchase requirements.

6. Application Certification:

1) A statement, signed under penalty of law that the information contained in the application is true and accurate.

2) Proof of continuous liability insurance in the amount of $5,000,000 per occurrence with a total policy minimum of $20,000,000 per year. This shall be submitted to the Town of Cape Vincent indicating coverage for potential damages or injury to landowners.

3) Disclosure of Financial Interests: For any financial interest held by a Municipal Officer or his or her relative in any wind development company or its assets within ten years prior to the date of an application for a permit under this Law, the Wind Company shall disclose in a separate section of the application the Municipal Officer or his or her relative, the addresses of all persons included in the disclosure, and the nature and scope of the financial interest of each person including total payments made to the official and his or her relative. The disclosure shall include all such instances of financial interest of which the Wind Company has knowledge, or through the exercise of reasonable diligence should be able to have knowledge, and the format of the submission shall be subject to the approval of the Town Board.

4) The Town shall require the applicant to fund an escrow agreement pursuant to Section 5.7.2 of this Law to cover the amount by which the Town's cost to review the applicant's applications exceed the application fees paid by the applicant. This shall include professional fees as may be required.

7. Noise Requirements:
   1) Any WECS shall comply with Noise Standards described in Section 6.7, pgs. 34-38, Noise.

   2) Because low frequency WECS noise is most annoying and problematic and because larger WECS emit proportionally more low frequency noise, therefore, the rated output of any WECS shall not exceed 1.6 megawatts.

8. Application Review Process: See Sections 5.4.6, (Planning Board) Site Plan Review and 5.3, (Zoning Board of Appeals) Special Use Permit.

9. WECS Standards:
   In addition to General Requirements for Tall Structures, Section 7.14.4, the following requirements shall apply to WECS only:

   1) All power transmission lines from the tower to any building or other structure shall be located underground.

   2) No television, radio or other communication antennas may be affixed or otherwise made part of any WECS, except pursuant to the Town's Site Plan Review procedures.

   3) Lighting of tower. No tower shall be lit except to comply with FAA requirements. Any multiple, synchronous FAA lighting shall include switching technology which activates tower lights only if there is an approaching aircraft. Minimum security lighting for ground-level facilities shall be allowed as approved on the Site Plan.

   4) All applicants shall use measures to reduce the visual impact of WECS to the extent possible. All structures in a project shall be finished in a single, non-reflective matte finished color or a camouflage scheme. Individual WECS shall be constructed using wind turbines whose appearance, with respect to one another, is similar within and throughout the area, to provide reasonable uniformity in overall size, geometry, and rotational speeds. No lettering, company insignia, advertising, or graphics shall be on any part of the tower, hub, or blades.

   5) All WECS shall have stand-alone towers and no guy wires are permitted.

   6) No WECS shall be installed in any location where its proximity with existing fixed broadcast, retransmission, or reception antenna for radio, television, or wireless phone or other personal communication systems will produce electromagnetic interference with signal transmission or reception. The applicant is required to notify all federal,

state, local, and private agencies that may be impacted by their development.

7) In recognition of the value and importance of the Town's historical and scenic assets, WECSs shall be setback at least 1.25 miles from NY State Route 12E, the Seaway Trail and National Scenic Byway. (Appendix 9, Large Scale WECS Exclusion Map.)

8) To minimize potential impact on the Town's most valued property, all WECS shall be setback at least 2 miles from lake and river waterfronts. (Appendix 9, Large Scale WECS Exclusion Map.)

9) To protect the health and safety of all Town residents from ice throw and potential rotor failure, each WECS shall be setback a minimum of:

   (a) Six times the total height of the proposed WECS from the nearest residence.

   (b) Six times the total height of the proposed WECS from the nearest project boundary or property line.

   (c) Six times the total height of the proposed WECS from any road.

   (d) 1.25 miles from any WECS to the boundaries of the Village of Cape Vincent and from the Hamlets of Rosiere, Millens Bay, and St. Lawrence Corners as shown on the "Large Scale WECS Exclusion Map," Appendix 9.

   (e) 1.25 miles from schools. (Appendix 9, Large Scale WECS Exclusion Map.)

   (f) In order to ensure that residents of adjoining Towns of Lyme and Clayton are not negatively affected by any WECS proposed in the Town of Cape Vincent, any WECS near the Town's boundaries shall comply with the Noise Standards in Section 6.7 and shall be no closer than six times the total height of the proposed WECS to that boundary.

10) A map entitled, "Large Scale WECS Exclusion Map," is attached to this Law as Appendix 9 and it delineates the areas of the Town within which WECS are excluded in conformity with the setbacks established herein above.

7.14.9 Small Wind Energy Conversion System (SWECS):

a. Intent:
SWECS are permitted as per Table 8.

Table 11

Type Of Small Wind Energy Facility	**Description**
Small system - Less than or equal to 10 kw	Intended for the generation of electricity for residential use. Designed to be roof mounted or free standing. May be horizontal or vertical axis designs and may be shrouded.
Small system – Greater than 10 kw and less than or equal to 60 kw	Intended for the generation of electrical power for and accessories such as farm operations and small businesses. Designed to be free standing. May be horizontal or vertical axis designs and may be shrouded.

b. Requirements:

1) The most critical aspect of the safety of these units is the proper selection, installation, and maintaining a full electrical load on the generator once in operation. Consideration should be given to allow only units manufactured with controls, braking, and a redundant fail-safe system to stop operation from ground level in the event of over speed or other emergency condition.

2) All SWECS shall comply with the following requirements. Additionally, such systems shall also comply with all the requirements established by other Sections of this Law that are not in conflict with the requirements contained in this Section.

3) The minimum distance between the ground and any part of the rotor blade of a free-standing turbine shall be 30 feet. The maximum height for SWECS $\leq$ 10 shall not exceed 120 feet. The maximum height for SWECS >10 and $\leq$ 60 shall not exceed 180 feet.

4) Setbacks from residential property lines for SWECS shall follow Table 12 below.

Table No. 12	**Minimum Setback to Property Line**
Horizontal Axis Turbines	2 x tower height

Vertical Axis Turbines	1 ½ x total tower height
Horizontal Axis w/Shroud or Enclosure Turbines	1 ½ x total tower height
Roof Mounted Turbines	Should be the height of the structure plus the height of the turbine

5) All SWECS tower structures shall be designed, manufactured, and constructed to comply with pertinent provisions of the Uniform Building Code, National Electric Code under the National Fire Protection Association (NFPA), Underwriters Laboratory (UL), and International Code Council, Small Wind Certification Council Standards (ICC, SWCCC). Provide documentation that the system is equipped with manual and automatic over speed controls. The conformance of rotor and over speed control design and fabrication with good engineering practices shall be certified by the manufacturer.

6) Noise Requirements- Any SWECS shall comply with Noise Standards described in Section 6.7, pgs. 34-38, Noise.

7) All on-site electrical wires associated with the system shall be installed underground. "Tie-ins" shall be governed by the utility company.

8) At least one sign shall be posted on the tower at a height of five feet warning of electrical shock or high voltage and harm from revolving machinery. No brand names, logo, or advertising shall be placed or painted on the tower, rotor, generator, or tail vane where it would be visible from the ground, except that a system or tower manufacturer's logo may be displayed on a system generator housing in an unobtrusive manner.

9) Any SWECS with an appearance of abnormal operation, or a complaint by a neighboring property owner/occupant, shall contact the Zoning Enforcement Officer within 24 hours.

10) Abatement/Removal:

a. If any SWECS stops converting wind energy into electrical energy and/or distribution of that energy for on-Site use or transmission onto the electrical grid for a continuous period of 12 months, the applicant/ permittee shall remove said system at its own expense following, if applicable, the requirements of the decommissioning plan required under this Section or any Permit except for good cause shown as approved by the Town Board.

b. Non-function or lack of operation may be proven by reports to the Public Service Commission, NYSERDA or by lack of income generation. The applicant shall make available to a designee (i.e. town engineer, project manager, etc.) appointed by the Town Board, all reports from the purchaser of energy from individual SWECS, if requested to prove the SWECS is functioning. This designee may also request periodic documentation reporting the power output generated by the SWECS.

c. If the permittee fails to remove the structure in a reasonable time, the Town Board may, upon notice to the permittee resolve to engage a contractor to remove the structure at the property owner's expense. The permittee shall consent to this process as a condition of any permit or approval granted by the Town Board.

7.15 Veterinary Practice and Kennels:

1. The lot exclusion zone shall be at least 100 feet all around the lot.
2. The operation of the practice shall be controlled so as to minimize any audio, visual, or odor impact at the lot exclusion line.
3. All animals shall be kept within an enclosed area or on a leash.
4. All animals shall be kept in a closed building between 8 p.m. and 8 a.m.

8. NON-CONFORMITIES

1. Intent:
   The intent of this Section is to recognize certain uses, lots of record, and structures which legally existed at the time of enactment of this Law and which would be prohibited or unreasonably restrictive by the provisions, regulations, standards, or procedures herein. This Section shall not, however be construed to perpetuate or encourage the survival or expansion of such uses, lots or structures.

2. Non-Conforming Uses: A non-conforming use or structure may be continued on the premises provided that:

   a. Any non-conforming use which has, for any reason, been discontinued for a period of 18 months or longer, shall not be re-established and only conforming uses/structures shall be thereafter permitted.
   b. No non-conforming use/structure may be expanded beyond the confines existing at the time of this Law's adoption.

3. Non-Conforming Lots of Record:

   a. Any lot of record held under separate ownership prior to the enactment of the Law and having a lot width or lot depth, or both, less than the minimum area requirement set forth in this Law may be developed with any

compatible use listed for the district in which such non-conforming lot is located without requiring a variance. If the non-conforming lot cannot meet the required setbacks, it will require an area variance.

4. Non-Conforming Structures

   Any pre-existing structure which, by the enactment of this Law, is made non-conforming may be used for any compatible use listed for the district in which structure is located provided that it shall not be enlarged so as to increase its non-conformity in terms of Lot Utilization Area, or lot coverage.

   a. The expansion of a building which is non-conforming with respect to lot utilization area, setbacks, shall be considered an increase in non-conformance, unless the expansion itself is within the lot utilization area.

   b. Nothing under the provisions of this Law shall prevent the repair or restoration of a non-conforming structure so long as it is not enlarged or expanded as a result thereof.

   c. Changing the height of the pre-existing structure up to a height of 35 feet shall not be considered an expansion of the non-conformity.

5. Non-Conforming Manufactured (Mobile) Homes on Individual Lots

   a. A non-conforming manufactured (mobile) home is one that does not meet the regulations of Section 7.7 at the time this Law was adopted.

   b. Any manufactured (mobile) home that is unoccupied for 18 months must either meets the requirements of Section 7.7 or be removed from the site.

   c. Any non-conforming manufactured (mobile) home may be replaced by a mobile home of the same or greater size, but shall meet the requirements of Section 7.7 and all applicable zoning requirements.

6. Non-conforming Manufactured (Mobile) Homes in Manufactured (Mobile) Home Parks

   a. Any expansion of manufactured (mobile) home parks must meet the requirements of Section(s) 7.7 II and/or III as appropriate.

   b. Any change of individual manufactured (mobile) homes must meet the requirements of: Section 7.7

   c. Fire Safety: Per Part 17, Mobile Home Parks (Statutory)
      "Spacing: Homes and accessory buildings or structures installed after the effective date of this code shall be situated such that a minimum separation distance of 10 feet exists to any home, building, or structure on any other site or parcel of land."

9. DEFINITIONS

Except where specifically defined herein all words used in this Law shall carry their customary meaning. Words in the present tense include the future, single numbers include the plural, and plural numbers the singular. The word "lot" includes the word "plot" and "property." Doubt as to the precise meaning of any word used in this Law shall be clarified by the Zoning Board of Appeals.

Administrative and Review Expense:
All actual expenses incurred by the Town in the review and processing of an application. Such costs may include publication costs, consultant fees covering planning, engineering, environmental analysis, legal review, and other technical services required for a proper and thorough professional review of the application

Adult Use:
Any person, establishment, business, or use of such establishment, by the nature of its operation, (excluding the sale of alcoholic beverages) is not or would not be to be open to the public generally due to the exclusion of any minor by reason of age or by operation of New York statute law. Any business involved in the dissemination of materials distinguished or characterized by the emphasis on matter depicting, describing, or relating to specific sexual activities or anatomical activities, including but not limited to adult arcades, adult bookstores or video stores, adult cabarets, adult live entertainment, adult motion picture theaters, and adult novelty stores.

Aggrieved Party:
An aggrieved party for the purpose of land use is one who suffers damage that is special or unique to them and not one which is suffered by the public in general as determined by state law.

Agriculture:
All activities related to the growing or raising of crops or livestock.

Agriculture & Market District:
A district, created by the County Board of Supervisors, according to Agriculture and Market Law Article 25AA.

Accessory Use:
A use customarily incidental and subordinate to the principal use of a lot or building. This use shall be located on the same lot as the principal use and shall be under the same ownership and can be conducted without any significant adverse impact on the surrounding neighborhood.

Anemometer:
An instrument that measures wind speed.

Animal Feed Lots – Concentrated:
A facility where dairy and beef animals are raised, confined and fed.

Antenna:
A system of electrical conductors that transmit or receive electromagnetic waves, radio frequency, or other wireless signals.

Automotive Sales:
Any commercial display, sale, or rental of motorized or recreational vehicles.

Automotive Service/Repair:
Any area of land, including structures, that is used or designed to service motor vehicles by supplying fuel (i.e. gas station) oil or other lubricants, and/or to provide other types of service such as maintenance, repair, body work, polishing, greasing, painting, or washing such motor vehicles. An establishment that satisfies this definition and also sells unrelated retail goods shall be considered to be both an automobile service station and a retail use as a convenience store.

A-Weighted Sound Level (dBA): A measure of overall sound pressure level designed to reflect the response of the human ear, which does not respond equally to all frequencies. It is used to describe sound in a manner representative of the human ear's response. It reduces the effects of the low with respect to the frequencies centered around 1000Hz. The resultant sound level is said to be "Weighted" and the units are "dBA." Sound level meters have an A-weighting network for measuring A-weighted sound levels (dBA) meeting the characteristics and weighting specified in ANSI Specifications for Integrating Averaging Sound Level Meters, 51.43-1997 for Type 1 instruments and be capable of accurate readings (corrections for internal noise and microphone response permitted) at 20 dBA or lower. In this Law dBA means LEQ unless specified otherwise.

Background Sound:
Background sounds are those heard during lulls in the ambient sound environment and represent the quietest 10% of the time, for example the quietest one minute.

Bar/Tavern: Includes all facilities whose principal business is the sale of alcoholic and other types of beverages, as well as the sale of prepared food.

Bed and Breakfast:
An owner-occupied, one-family dwelling used for providing overnight accommodations and a morning meal to not more than ten (10) transient lodgers containing one (1) but not more than five (5) rental bedrooms for such lodgers.

Blade Glint:
The intermittent reflection of sunlight off the surface of the blades of one or more wind turbines.

Boathouse:
A structure over the water and enclosed on three sides with a roof used for dockage and storage of watercraft. The boathouse cannot be used as a dwelling unit.

Building:

Structure having a roof supported by columns or walls and intended for shelter or enclosure of persons, animals, or property.

Cabin:
A one-story, 1300-square foot maximum, stick built structure that is constructed on or off site.

Campground:
A parcel of land which is used for temporary use of tents and recreational vehicles on a commercial basis.

Roadway:
The portion of a street right-of-way, either paved or unpaved, intended for vehicular use.

Cemetery:
A plot of land used for internment of the deceased, excluding family plots.

Commercial:
A business activity characterized by the manufacture, storage, or sale of goods or services to the customer or other business for the purpose of generating an income or profit.

Commercial Animal Slaughtering and Rendering:
A facility used for butchering of animals and/or processing of animal carcasses for commercial purposes.

Commercial Parking:
On premises parking at a place of commerce.

Corner Lot:
A lot bounded on at least two (2) sides by roads, whenever the lines of such streets, extended, form an interior angle of one hundred thirty-five (135) degrees or less.

Correctional/Detention Facility:
A facility for the long-term incarceration of convicted felons.

Cottage:
One separate, single dwelling unit used as lodging for short-term or seasonal use.

C-Weighted Sound Pressure Level (dBC):
Similar in concept to the A-weighted sound Level (dBA) but C-weighting does not de-emphasize the frequencies below 1k Hz as A-weighting does. It is used for measurements that must include the contribution of low frequencies in a single number representing the entire frequency spectrum. Sound level meters have a c-weighting network for measuring C-weighted sound levels (dBC) meeting the characteristics and weighting specified in ANSI SI.43-1997 Specifications for Integrating Averaging Sound Level Meters for Type 1 instruments. In this Law dBC means L unless specified otherwise.

Day-Care Facility:
A facility duly permitted by New York State Department of Social Services for the care of seven or more adults or children for less than 24 hours a day.

Decibel (dB):
A dimensionless unit describing the amplitude of sound and denoting the ratio between two quantities that are proportional to power, energy, or intensity. One of these quantities is equal to 20 times the logarithm to the base 10 of the ratio of the measured pressure to the reference pressure, which is 20 micropascals.

Development:
Any man-made change that modifies the prior existing state of specific real property.

Dock (Covered):
An open structure over the water consisting of support posts and a roof with a maximum pitch of 4/12 used for the dockage and storage of watercraft. A covered dock may not have any walls.

Dwelling Unit:
Building or part thereof used as living quarters for one household. The terms "dwelling," "single-household dwelling," or "multi-household dwelling" shall not include motel/hotel, bed and breakfast, inn, lodging house, or boathouse.

Educational Facility:
Any school licensed by the State of New York that provides organized courses of study by or under the guidance of a teacher.

Electrical Power Transmission Tower:
A structure for the support of electrical power transmission lines.

Electromagnetic Frequency:
The measurement of electromagnetic fields which are made by the movement of electrically charged particles.

Equivalent Noise Level (Leq):
The A-weighted or C-weighted equivalent noise level (the average noise level). It is defined as the steady noise level that contains the same amount of acoustical energy as the corresponding time-varying noise.

Erosion and Sedimentation Control Plan:
A design to minimize soil erosion and sedimentation in compliance with regulations promulgated by the New York State Department of Environmental Conservation.

Farm:
Land used in agricultural production together with agricultural buildings or structures, equipment, and residential buildings.

Fence:
A continuous man-made barrier of wood, stone, plastic, wire, or other material commonly used as fencing material intended for enclosure, security, screening, or partitioning.

FAA:

The Federal Aviation Administration or successor agency.

FCC:
The Federal Communications Commission or successor agency.

Filing:
Submission of records to the Town Clerk and/or other government entities.
Government Facility:
A building or use that is operated by a governmental unit for the general well-being, health, safety, welfare, and enjoyment of the public.

Gross Density:
The number of dwelling units divided by the total acreage of the land upon which they are located, excluding any acreage used for non-residential purposes.

Gross Floor Area:
The total floor area of a building as determined by the outside dimensions of the building.

Gross Leasable Area (GLA):
The gross floor area designated for the exclusive use of tenants, clients and customers, not including public or common areas, such as public toilets, corridors, stairwells, elevators, lobbies or enclosed atria.

Hamlet: A small unincorporated village.

Healthcare Facility:
A licensed facility in which professional health services are rendered.

Height:
The vertical distance measured from the lowest elevation of the original topography of the structure's footprint to the highest point of the structure.

Home Occupation:
Any permitted use conducted within a dwelling by the residents thereof which is clearly secondary to the use of the dwelling for living purposes.

Hostel:
An inexpensive, supervised short-term lodging facility.

Hotel/Motel/Rental Dwelling Unit:
A commercial establishment offering lodging to travelers and sometimes to permanent residents and often having restaurants, meeting rooms, stores, etc., that are available to the general public.

Impervious Surface:
Any surface or structure that does not allow water to be absorbed into the underlying soil.

Impulse Noise:
A sound of short duration usually less than one second and of high intensity, with an abrupt onset and rapid decay, e.g., a gunshot or explosion.

Institutional Uses:
Any one (1) or more of the following uses, including grounds and ancillary structures necessary for their use: religious institutions, public parks, playgrounds and recreational areas, schools, public libraries. fire, ambulance, and public safety buildings, public or private meeting halls, or places of assembly not operated primarily for profit, hospitals, clinics, and transitional care facilities.

Junkyard:
An area of land with or without buildings, primarily used for the outside storage of used and discarded materials, including but not limited to waste paper, rags, metal, building materials, house furnishings, machinery, vehicles or parts thereof, including junk with or without the dismantling, processing, salvage, sale, or other use or disposition of the same. The deposit or storage of two or more vehicles as per General Municipal Law, Section 136, shall be deemed to make a lot a junkyard.

Kennel:
Any commercial establishment, including cages, animal runs and structures, where animals are harbored, bred, or boarded.

L*eq*:
Equivalent Continuous Sound Pressure Level is the constant sound level that would result in the same total sound energy being produced over a given period.

Lot Divided By A Right-of-Way:
When a lot is divided by a roadway, both sides of the roadway will be considered to be a lot line for purposes of setback guidelines.

Lot (Lot of Record):
A parcel of land, the legal description of which is filed with the County Clerk occupied or designed to be occupied by one (1) principal use structure and ancillary structures or used customarily incident to it, including such open spaces as are required by this Law.

Lot Exclusion Area:
The area between the lot lines and the setback lines is reserved for green space, such as lawn, landscaping, and screening and ingress and egress driveways only. No development or commercial parking is permitted within this area.

Lot Line:
A line by which all setbacks are measured.

Lot Line - Front:
The property line separating a plot or parcel of property from a road right-of-way line. If a lot adjoins two or more roads or highways, it shall be deemed to have a front line respectively on each. Waterfront lots shall be deemed to have a front lot line on the side of the lot closest to the body of water they abut. On a waterfront lot; therefore, the road right-of-way will become the rear lot line. On waterfront lots, the setbacks shall be measured from an imaginary

straight line connecting the intersections of the side lot lines with the US Army Corp. of Engineers, 1985 International Great Lakes Datum, Elevation 247.30 feet above sea level

Lot Line - Rear:
That lot line which is opposite the front lot line. A rear lot line shall not be adjacent to a front lot line. In the case of corner lots, there might be no rear lot line.

Lot Line - Side:
A line adjacent to the front lot line.

Lot Utilization Area:
That area bounded by the setback lines is the only area of a lot on which development and commercial parking is permitted. The lot utilization area for tall structures is defined as a circular area the radius of which is defined by the structure.

Lot Utilization Line:
This line is the setback line. The lot utilization line for tall structures is a concentric circular line around the tall structure where the tall structure is at the center. The radius of this line is dependent on both the height and the use of the tall structure.

Maintenance:
Plumbing, electrical, or mechanical work that might require a building permit but does not constitute a modification to a wind turbine or wireless telecommunications facility.

Manufactured Home (Mobile):
Manufactured housing built on a chassis. A manufactured (mobile) home shall be constructed to remain a manufactured (mobile) home, subject to all regulations applying thereto, whether or not wheels, axles, hitch, or other appurtenances of mobility are removed and regardless of the nature of the foundations provided. A manufactured (mobile) home shall not be construed to be a travel trailer or other form of recreational vehicle. A travel trailer, motor home, fifth wheel, or any other type of recreational vehicle shall not be construed to be a manufactured (mobile) home.

Manufactured (Mobile) Home - Double Wide:
Any manufactured (mobile) home that is greater than 16′ in width.

Manufactured (Mobile) Home - Single Wide:
Any manufactured (mobile) home which is 16′ or less in width.

Manufactured (Mobile) Home Park:
A lot in which multiple manufactured (mobile) homes and/or cabins are located and the property is overseen and run for commercial purposes.

Manufactured (Mobile) Home Park – Year Round:
Any manufactured (mobile) home park which is in operation on a year-round basis.

Manufacturing – Light
A small scale commercial facility that fabricates, assembles, treats, packages and/or stores products that do not emit objectionable levels of pollutants, noise, odor, or vibration.

Marina:
A waterfront facility, structure, or lot area for renting, storing, servicing, fueling, overhauling, inspection, and sales of sailboats, power boats, personal watercraft and ancillary items associated with water recreational sports and products used in water-related activities. Off-site storage of watercraft is included.

Meteorological Tower:
A tower used for the measurement and/or recording of meteorological data such as temperature, wind speed, and wind direction.

Mining/Quarry Operation:
A lot or parcel of land used for the purpose of extracting and processing stone, gravel, soil, or solid minerals for sale as an industrial or commercial operation.

Mining Operation, N.Y.S. Department of Environmental Conservation Regulated:
Any mining operation under the jurisdiction of Article 15, of the Environmental Conservation Law.

Modification or Modify:
Any change to a previously approved structure or other use.

Modular Home:
A dwelling, factory produced for transportation to a permanent site. The entire structure will be produced and assembled according to New York State standards for modular homes. The intent of this definition is to allow installation of modular homes constructed to standards equal to those required for on-site built dwellings. The steel undercarriage, used for transportation, is to be removed during home installation and assembly.

Multi/Household Dwelling:
A building designed for or occupied by two or more households living independently of each other.

Municipal:
Of or pertaining to the town or its local government.

National Scenic Byway:
A public road having special scenic, historic, recreational, cultural, archeological, and/or natural qualities that have been recognized as such through federal and state legislation or some other official governmental declaration or designation.

NIER:
Non-ionizing electromagnetic radiation.

Noise:
Any unwanted sound.

Non-Conformity:
A pre-existing lot, building, structure, or use of land legally and substantially existing at the time of enactment of this Law which does not now conform to the regulations of the district in which it is situated.
Nursery: A commercial business activity that grows, sells, or resells plants for commercial activity.

Odor:
An unwanted olfactory sensation.

Office - General:
A facility that is devoted exclusively to business, non-profit, or professional services.

Official Submission Date:
The date that all required information and fees for applications are received by, presented to, or otherwise examined by the appropriate board at an official meeting thereof. Materials presented at a pre-submission conference for Site Plan Review shall not be considered an official submission.

One-Third Octave Band:
A band of sound covering a range of frequencies such that the highest is the cube root of two times the lowest. The one-third octave bands are used in this standard are defined in ANSI Reference Standard S1.11.

Open Space:
That portion of the lot not covered by impervious surfaces or structures.

Owner:
An individual or entity having ownership of the land.

Permitted Use:
A use not requiring a Planning Board review but requiring a zoning permit to be issued by the Zoning Enforcement Officer.

Principal Use:
The main, dominant purpose for which any land or structure is intended, utilized, employed, or occupied.

Project Boundary:
The external boundaries of a parcel or parcels owned by or leased by the project operator/developer. It is represented on a plot plan view by a continuous line encompassing all parcels and owners cooperating in the project.

Public Road:
State, county, or town roadway regularly traveled by the public.

Radio Frequency (RF) Radiation:
A form of electromagnetic radiation emitted by transmitting antennas.

Recreational Resort:

A facility devoted to leisure time and sporting activities.

Recreational Vehicle:
A vehicle which is built on a chassis, self-propelled or permanently towed by a motor vehicle, such as a tow behind travel trailers, motor homes, coaches, 5th wheel trailers, truck campers, and pop-up campers, and is designed primarily as temporary living quarters for recreational camping, travel, or seasonal use. Not a permanent dwelling.

Recreational Vehicle Storage Facility:
Lot on which customers' generally store recreational vehicle(s) on a yearly basis.

Religious Use:
Includes church, temple, mosque, parish house, convent, seminary, school, and retreat house.

Rental Dwelling Unit:
A dwelling unit used for commercial purposes that is not occupied by the owner.

Residential Garage:
A structure, accessory to a dwelling unit, that is primarily used for storage of motor vehicles and personal possessions on a non-commercial basis.

Restaurant/Inn:
Any establishment, however designated, at which food and/or alcoholic beverages are sold for consumption to patrons seated within an enclosed building or on the premises. A temporary snack bar or refreshment stand at a public function shall not be deemed to be a restaurant.

Retail:
A commercial activity characterized by the direct on premise sale of goods and services to the customer.

Retention Basin:
A depression in the ground or a piping system designed to collect storm water allowing it to be dissipated in a controlled manner in accordance with governing regulations.

Right of Way:
A right of way is an easement that grants the right to pass over the land of another for a particular purpose, typically to access an adjoining parcel. The minimum width of an access easement is thirty (30) feet. This minimum width shall be expanded to fifty (50) feet in the event that the lot (s) to be accessed is brought to the Planning Board for Site Plan Review as a subdivision with more than one residence.

Salvage/Scrap Yard:
A commercial facility for the disassembly, warehousing, sale, and/or distribution of components from items no longer useful for their intended purpose. Only disassembled items are permitted in salvage yards.

Seasonal Home Park:

A lot in which multiple manufactured (mobile) homes and/or cabins are located and the property is overseen and run for commercial purposes on a seasonal basis.

SECS (Solar Energy Conversion System):
A system by which solar energy is collected by photovoltaic ("solar") panels, changed from Direct Current (DC) to Alternating Current (AC) by converters and utilized to supplement, and in some cases, replace electricity from a commercial utility grid. Large-scale SECS whose electricity output is intended for distant population centers are generally constrained by the existing capacity of the local grid distribution systems.

Sediment:
Soils or other surface materials transported by surface water as a product of erosion.

Self-Storage Facility:
A building or group of buildings that contain private storage spaces available for rent or lease for varying periods of time.
SEQR:
State Environmental Quality Review based on the State Environmental Quality Review Act.

Shadow Flicker:
The visual effect when the blades of an operating Wind Energy Conversion System pass between the sun and an observer, casting a readily observable, moving shadow on a person or property.

Single Family/Household Dwelling:
A building designed for or occupied exclusively by one family or household.

Site:
A parcel(s) of land where a project is to be constructed and operated.

Storage Shed:
A structure, accessory to a primary use, that is used to house equipment, tools, and materials.

Structure:
Any object constructed or installed to facilitate land use and development or subdivision of land such as buildings, sheds, signs, satellite dishes, boathouses, septic systems, and any fixtures, additions, and alterations thereto. Structures shall not include fences, landscaping, and other screens.

SWECS: Is a wind turbine less than or equal to 60 kw that is intended for the generation of electricity for home use and accessories such as farm operations and small businesses.

Tall Structure:
A structure that is taller than 60 feet and is not otherwise exempt from this Law.

Tall Structure Lot Utilization Area:
The tall structure lot utilization area shall be a circular area concentric with the structure. The radius of which depends on the application.

Telecommunications:
The transmission and/or reception of audio, video, data, and other information by wire, radio frequency, light, and other electronic or electromagnetic systems.

Telecommunication Tower:
A structure designed and used for the support of telecommunications equipment.

Tower:
Any structure designed primarily to support equipment.

Town Bulletin Board:
A display located at the Town Office for the placement of public notices.

Use:
The specific purpose for which land or a structure is designed, arranged, intended or for which it is or may be occupied or maintained.

Utility:
The erection, construction, alteration, operation, or maintenance by a municipal agency or public utility of energy or communication transmission lines including cable television lines, telephone equipment centers, electrical or gas substations, water treatment or storage facilities, pumping stations and similar facilities used to serve the local community.

Veterinary Practice:
A licensed healthcare facility for non-human entities, not including boarding or harboring.

Waterfront:
The topographical feature defined as the naturally occurring mean high water elevation of 247.3 feet above sea level as determined by US Army Corps of Engineers based on 1985 Great Lakes Datum. For purposes of this Law, artificially constructed harbors, docks, and boat slips are not naturally occurring.

Water Structure:
Any pier, boat dock, boat ramp, boat slip, wharf, weir, boom, breakwater, bulkhead, revetment, riprap, jetty or piling.

WECS (Wind Energy Conversion System)
A wind farm with multiple turbines that are greater than 60 kw and are intended for industrial use.

Workshop/Studio Building:
An accessory structure typically used for crafts, hobbies, and arts.

Zoning Enforcement Officer:
A person appointed/hired by the Town Board to ensure compliance with the regulations of this Law.

Zoning Permit:
A written authorization from the Zoning Enforcement Officer to proceed with a project.

Appendix No 1
Zoning Map

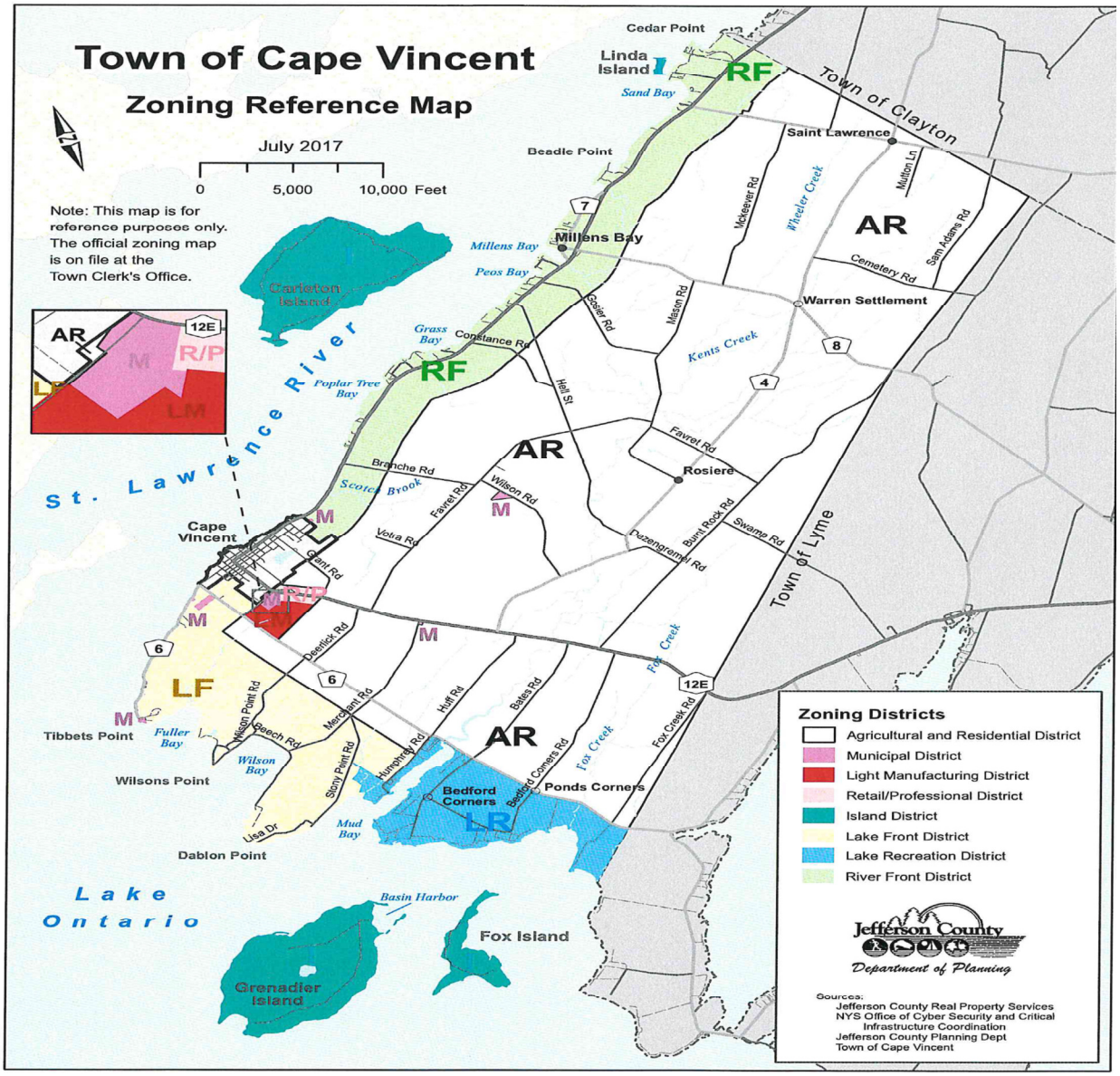

Appendix No. 2
Instructions to Applicant

Supervisor
URBAN C. HINSHEY

Town Clerk / Tax Collector
MICHELLE A. HOLCHAND

Councilmen
MICKEY W. ORVIS
BROOKS J. DRAYSON
CLIFFORD P. SCHNEIDER
JOHN L. BYRNE III

Superintendent of Highways
DANNY P. HUBBARD

TOWN OF CAPE VINCENT

Jefferson County, New York 13618

Assessor
ROBERT V.R. BARNARD

Historian
PETER J. MAISONEY

Planning Board Chairman
RICHARD H. MAGGIERRY

Board of Appeals Chairman
R. DENNIS FAULKNHAM

Zoning Enforcement Officer
EDWARD P. BENDER

PHONE (315) 654-3786
FAX (315) 654-3366

INSTRUCTIONS TO APPLICANTS

1. Applicant receives zoning permit application from the Town Clerk or Zoning Enforcement Officer (ZEO)

2. Applicant submits the completed zoning permit application to the ZEO. If approved the ZEO issues the zoning permit and the applicant can apply for a building permit from the county at 175 Arsenal Street Water town, New York 13601

3. Before construction the Applicant shall contact the ZEO to inspect the property for compliance. If all is in order the zoning enforcement officer will issue a certificate of compliance.

4. If Zoning Permit is denied the Applicant may apply to the Zoning Board of Appeals (ZBA) for a variance.

5. When the Applicant has completed the variance application he may appear before the ZBA for a preliminary discussion.

6. The Applicant shall have legible drawings showing the dimensions of the lot and the location of the structure relative to side, front and rear setbacks as precise as possible.
   Photographs are required in assisting the ZBA in making a decision.
   The footprint of the structure should be accurately staked to show the exact location of the structure.

7. If a variance is granted by the ZBA the Applicant must obtain a Zoning Permit ZEO in order to obtain a building permit.

Appendix No. 3
Zoning Permit Application Form

TOWN OF CAPE VINCENT

Jefferson County, New York 13618

Zoning Permit Application

Name of applicant: _____ Telephone: (___) -_____-_____

Agent/Contractor: _____ Cell # : (___) -_____-_____

Mailing Address: _____

_____

City State Zip Code

Location by street or 911# _____

Tax Map # _____ Zoning District ☐LF ☐LR ☐RF ☐AR ☐C ☐RP ☐I

Nature of work: ☐ New Building ☐ Addition ☐ Installation

Dimensions of entire structure

Front _____ Rear _____ Depth _____ Maximum Height _____

Foundation Type: ☐ Concrete ☐ Masonry ☐ Steel ☐P.T. Wood ☐ Other _____

Structure Type: ☐Wood ☐Stone ☐ Masonry ☐Concrete ☐ Other _____

Structure Use: ☐ Residential ☐Commercial ☐Retail/Professional ☐Agricultural

Further description of project: _____

Lot Size: Front _____ Rear _____ Depth _____ Area (sq ft) _____

Requirements:

A sketch plan must accompany this application showing the placement of the proposed structure on the lot. The drawing shall show distance between the structure and all lot lines, other structures on the lot, road right-of-way line and any other outstanding natural or man made features on or adjacent to the lot. The dimensions of the lot lines shall be noted. Such drawing shall be prepared for a change of use in an existing structure as well.

The applicant shall lay out stakes on the lot enabling the zoning officer to determine building location and lot lines.

I, the owner or agent of the proposed use for which this permit application is being made, do hereby affirm that the above information is true and accurate, and that it conforms to the Zoning Law and all other applicable laws.

_____ _____

Landowner of Agent Signature Date

For Office Use Only:

Permit # _____ Appeals # _____

Approved: _____ Date: _____

Denied: _____ Date: _____

Zoning Law Section and Paragraph; _____

Site Plan Referral Date: _____

Appendix No. 4
Short EAF (Environmental Assessment Form)

617.20
Appendix B
Short Environmental Assessment Form

Instructions for Completing

Part 1 - Project Information. The applicant or project sponsor is responsible for the completion of Part 1. Responses become part of the application for approval or funding, are subject to public review, and may be subject to further verification. Complete Part 1 based on information currently available. If additional research or investigation would be needed to fully respond to any item, please answer as thoroughly as possible based on current information.

Complete all items in Part 1. You may also provide any additional information which you believe will be needed by or useful to the lead agency; attach additional pages as necessary to supplement any item.

Part 1 - Project and Sponsor Information		
Name of Action or Project:		
Project Location (describe, and attach a location map):		
Brief Description of Proposed Action:		
Name of Applicant or Sponsor:	Telephone:	
	E-Mail:	
Address:		
City/PO:	State:	Zip Code:

	NO	YES
1. Does the proposed action only involve the legislative adoption of a plan, local law, ordinance, administrative rule, or regulation? If Yes, attach a narrative description of the intent of the proposed action and the environmental resources that may be affected in the municipality and proceed to Part 2. If no, continue to question 2.	☐	☐
2. Does the proposed action require a permit, approval or funding from any other governmental Agency? If Yes, list agency(s) name and permit or approval:	☐	☐

3.a. Total acreage of the site of the proposed action? _____ acres
b. Total acreage to be physically disturbed? _____ acres
c. Total acreage (project site and any contiguous properties) owned or controlled by the applicant or project sponsor? _____ acres

4. Check all land uses that occur on, adjoining and near the proposed action.
☐ Urban ☐ Rural (non-agriculture) ☐ Industrial ☐ Commercial ☐ Residential (suburban)
☐ Forest ☐ Agriculture ☐ Aquatic ☐ Other (specify): _____
☐ Parkland

	NO	YES	N/A
5. Is the proposed action, a. A permitted use under the zoning regulations?	☐	☐	☐
b. Consistent with the adopted comprehensive plan?	☐	☐	☐
6. Is the proposed action consistent with the predominant character of the existing built or natural landscape?		NO ☐	YES ☐
7. Is the site of the proposed action located in, or does it adjoin, a state listed Critical Environmental Area? If Yes, identify: _____		NO ☐	YES ☐
8. a. Will the proposed action result in a substantial increase in traffic above present levels?		NO ☐	YES ☐
b. Are public transportation service(s) available at or near the site of the proposed action?		☐	☐
c. Are any pedestrian accommodations or bicycle routes available on or near site of the proposed action?		☐	☐
9. Does the proposed action meet or exceed the state energy code requirements? If the proposed action will exceed requirements, describe design features and technologies: _____		NO ☐	YES ☐
10. Will the proposed action connect to an existing public/private water supply? If No, describe method for providing potable water: _____		NO ☐	YES ☐
11. Will the proposed action connect to existing wastewater utilities? If No, describe method for providing wastewater treatment: _____		NO ☐	YES ☐
12. a. Does the site contain a structure that is listed on either the State or National Register of Historic Places?		NO ☐	YES ☐
b. Is the proposed action located in an archeological sensitive area?		☐	☐
13. a. Does any portion of the site of the proposed action, or lands adjoining the proposed action, contain wetlands or other waterbodies regulated by a federal, state or local agency?		NO ☐	YES ☐
b. Would the proposed action physically alter, or encroach into, any existing wetland or waterbody? If Yes, identify the wetland or waterbody and extent of alterations in square feet or acres: _____		☐	☐
14. Identify the typical habitat types that occur on, or are likely to be found on the project site. Check all that apply: ☐ Shoreline ☐ Forest ☐ Agricultural/grasslands ☐ Early mid-successional ☐ Wetland ☐ Urban ☐ Suburban			
15. Does the site of the proposed action contain any species of animal, or associated habitats, listed by the State or Federal government as threatened or endangered?		NO ☐	YES ☐
16. Is the project site located in the 100 year flood plain?		NO ☐	YES ☐
17. Will the proposed action create storm water discharge, either from point or non-point sources? If Yes, a. Will storm water discharges flow to adjacent properties? ☐ NO ☐ YES		NO ☐	YES ☐
b. Will storm water discharges be directed to established conveyance systems (runoff and storm drains)? If Yes, briefly describe: ☐ NO ☐ YES _____			

	NO	YES
18. Does the proposed action include construction or other activities that result in the impoundment of water or other liquids (e.g. retention pond, waste lagoon, dam)? If Yes, explain purpose and size: _____	☐	☐
19. Has the site of the proposed action or an adjoining property been the location of an active or closed solid waste management facility? If Yes, describe: _____	☐	☐
20. Has the site of the proposed action or an adjoining property been the subject of remediation (ongoing or completed) for hazardous waste? If Yes, describe: _____	☐	☐

I AFFIRM THAT THE INFORMATION PROVIDED ABOVE IS TRUE AND ACCURATE TO THE BEST OF MY KNOWLEDGE

Applicant/sponsor name: _____ Date: _____

Signature: _____

Part 2 - Impact Assessment. The Lead Agency is responsible for the completion of Part 2. Answer all of the following questions in Part 2 using the information contained in Part 1 and other materials submitted by the project sponsor or otherwise available to the reviewer. When answering the questions the reviewer should be guided by the concept "Have my responses been reasonable considering the scale and context of the proposed action?"

	No, or small impact may occur	Moderate to large impact may occur
1. Will the proposed action create a material conflict with an adopted land use plan or zoning regulations?	☐	☐
2. Will the proposed action result in a change in the use or intensity of use of land?	☐	☐
3. Will the proposed action impair the character or quality of the existing community?	☐	☐
4. Will the proposed action have an impact on the environmental characteristics that caused the establishment of a Critical Environmental Area (CEA)?	☐	☐
5. Will the proposed action result in an adverse change in the existing level of traffic or affect existing infrastructure for mass transit, biking or walkway?	☐	☐
6. Will the proposed action cause an increase in the use of energy and it fails to incorporate reasonably available energy conservation or renewable energy opportunities?	☐	☐
7. Will the proposed action impact existing: a. public / private water supplies?	☐	☐
b. public / private wastewater treatment utilities?	☐	☐
8. Will the proposed action impair the character or quality of important historic, archaeological, architectural or aesthetic resources?	☐	☐
9. Will the proposed action result in an adverse change to natural resources (e.g., wetlands, waterbodies, groundwater, air quality, flora and fauna)?	☐	☐

	No, or small impact may occur	Moderate to large impact may occur
10. Will the proposed action result in an increase in the potential for erosion, flooding or drainage problems?	☐	☐
11. Will the proposed action create a hazard to environmental resources or human health?	☐	☐

Part 3 - Determination of significance. The Lead Agency is responsible for the completion of Part 3. For every question in Part 2 that was answered "moderate to large impact may occur", or if there is a need to explain why a particular element of the proposed action may or will not result in a significant adverse environmental impact, please complete Part 3. Part 3 should, in sufficient detail, identify the impact, including any measures or design elements that have been included by the project sponsor to avoid or reduce impacts. Part 3 should also explain how the lead agency determined that the impact may or will not be significant. Each potential impact should be assessed considering its setting, probability of occurring, duration, irreversibility, geographic scope and magnitude. Also consider the potential for short-term, long-term and cumulative impacts.

☐ Check this box if you have determined, based on the information and analysis above, and any supporting documentation, that the proposed action may result in one or more potentially large or significant adverse impacts and an environmental impact statement is required.

☐ Check this box if you have determined, based on the information and analysis above, and any supporting documentation, that the proposed action will not result in any significant adverse environmental impacts.

Name of Lead Agency	Date
Print or Type Name of Responsible Officer in Lead Agency	Title of Responsible Officer
Signature of Responsible Officer in Lead Agency	Signature of Preparer (if different from Responsible Officer)

PRINT

Appendix No. 5
Basic Site Plan Review Procedure

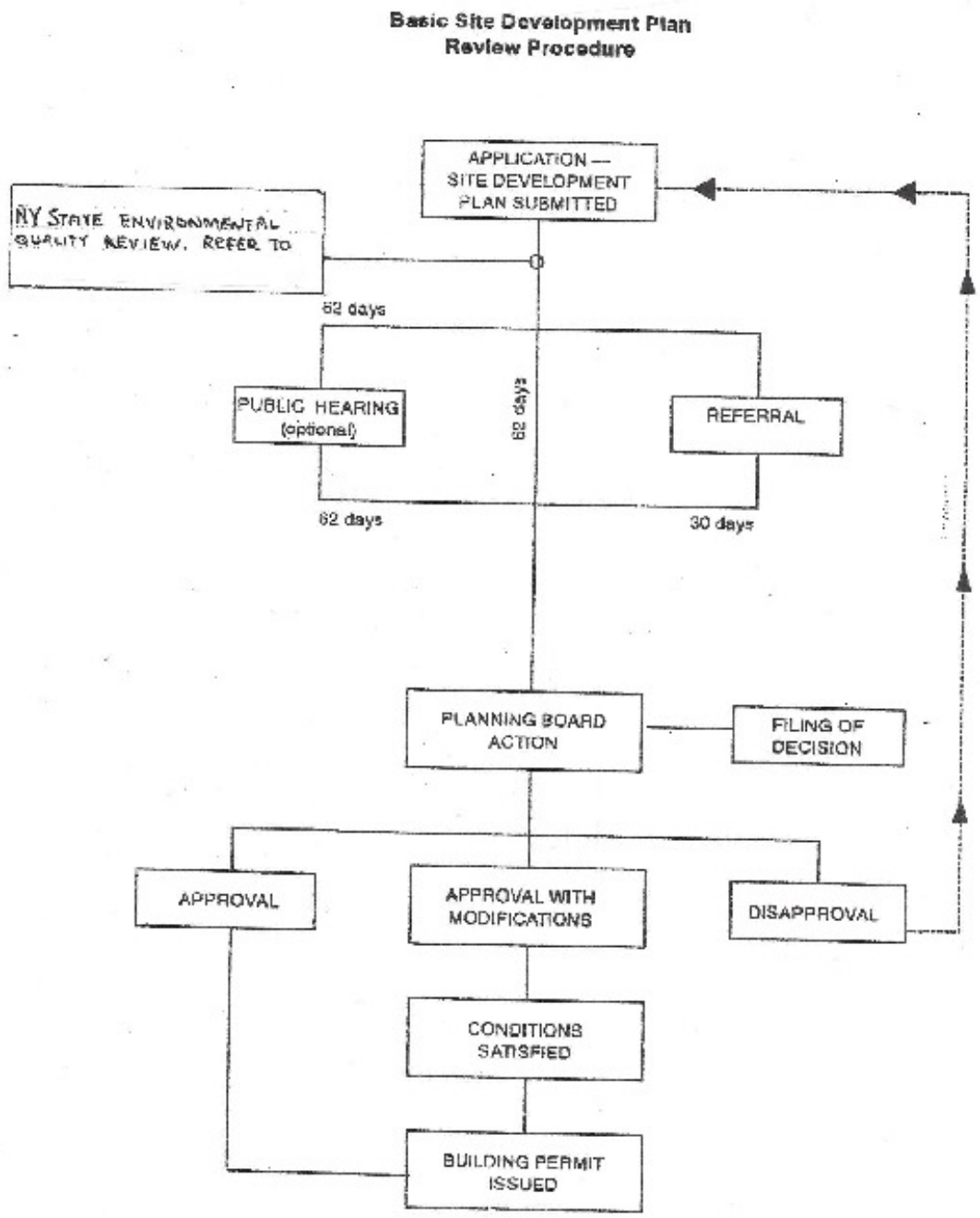

Appendix No. 6
SEQR Flow Chart

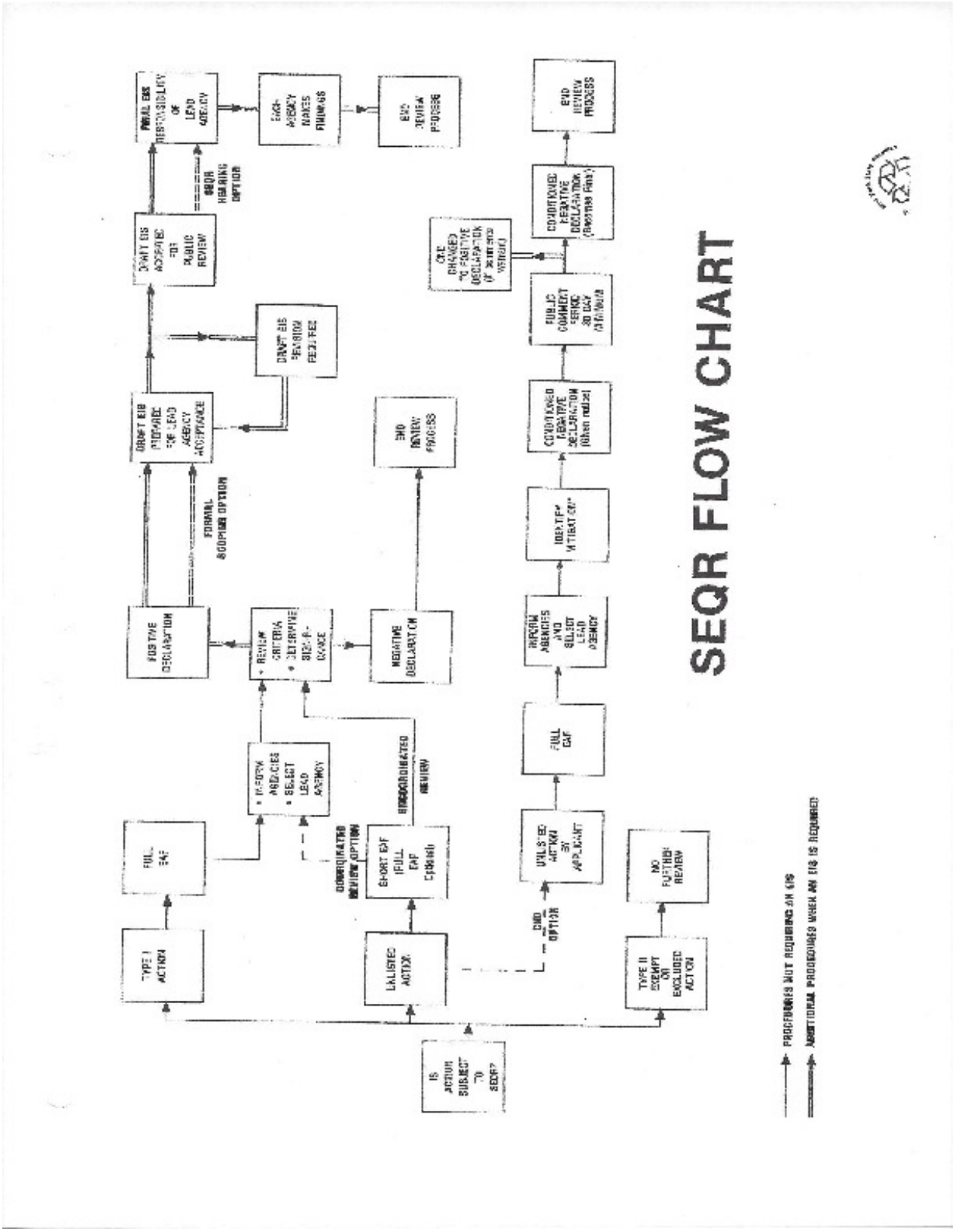

Appendix No. 7
Stop Work Order

Town of Cape Vincent

Jefferson County, NY 13618

Zoning Law

Stop Work Order

YOU WILL PLEASE TAKE NOTICE that there exists a violation of:
Section: _____, Page:_____ of the Town of Cape Vincent Zoning Law.
At the following Location:_____
Tax Map Number: _____

In that (state character of violation):

_____
_____
_____
_____
_____
_____
_____
_____
_____

You are hereby

Directed and Ordered to Stop Work,

comply with the Law, and to remedy the condition above mentioned
On or before (date):_____

Failure to remedy the condition aforesaid and to comply with the applicable provisions of law may constitute an offense punishable by fine, imprisonment, or both.

_____ _____
Date Zoning Enforcement Officer

CC: Town Clerk

Appendix No. 8
Notice of Violation

TOWN OF CAPE VINCENT

JEFFERSON COUNTY, NEW YORK 13618

Tax Parcel Number: Section: Block: Lot:
Log No.: _____

NOTICE OF VIOLATION - ORDER TO REMEDY

(date)

(name)

(address)

(city, state, zip code)

Dear _____,

You are hereby notified that you have been found to be in violation of the Zoning Law Article _____, Section _____, Subsection _____. The specific violation is: _____

_____

_____

as observed by the zoning enforcement officer on _____ . ____.

The following corrective measures should be taken no later than _____ _____ or penalties may be assessed: _____

_____

_____

For the purposes of applying the penalties described in the Administrative Section of the Zoning Law, your first violation shall be deemed to have occurred as of _____ _____.

If you have questions, please contact me.

Sincerely,

_____

Zoning Enforcement Officer

Please Note: A violation of this code is punishable by a fine not to exceed ___ Each _____ of continued violation shall constitute an additional, separate offense, after court determination.

Appendix No. 9
Large Scale WECS Exclusion Map

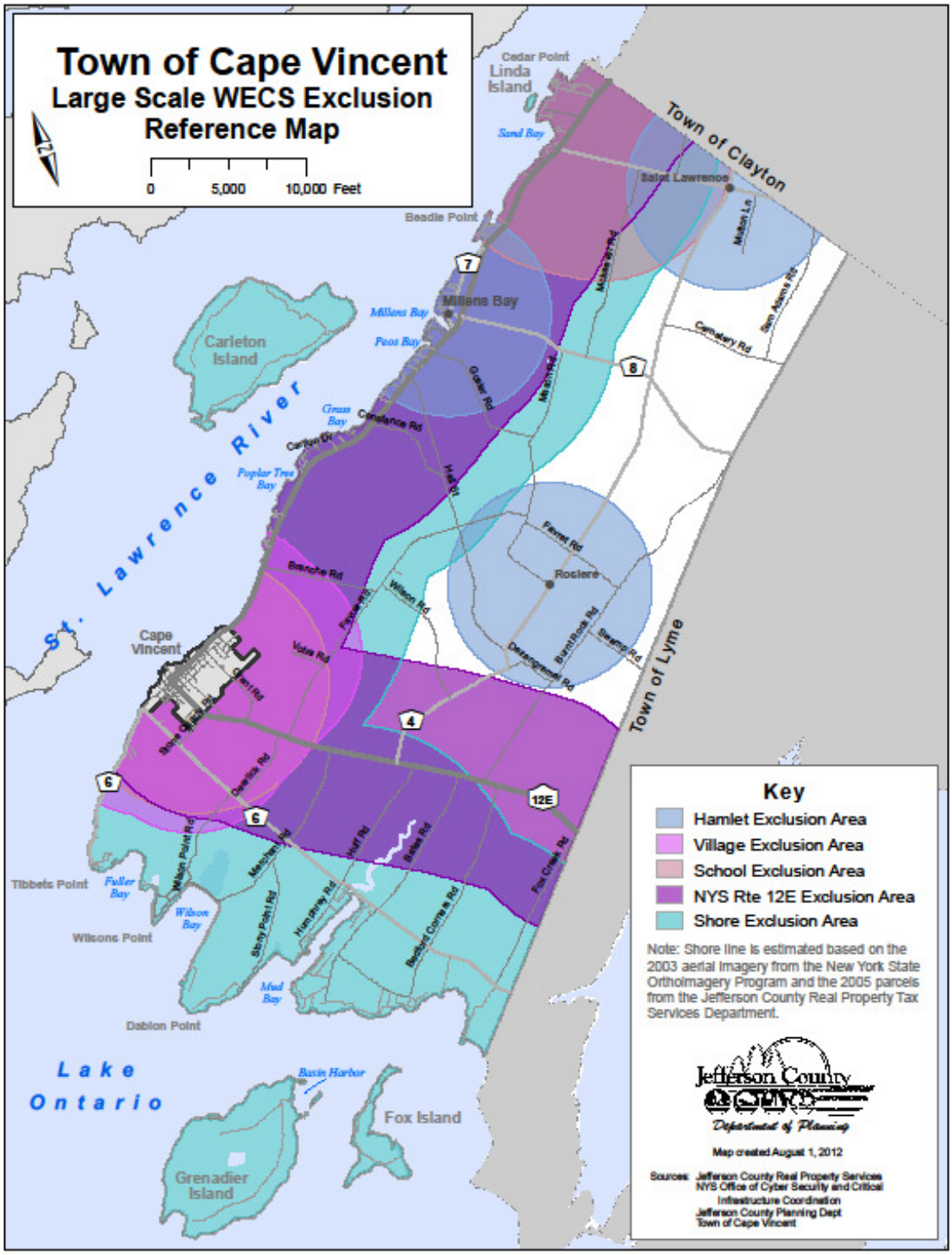

Appendix No. 10

TOWN OF CAPE VINCENT
SITE PLAN REVIEW APPLICATION

The application for site plan approval consists of Parts A and B, an Environmental Assessment Form as required by the State Environmental Quality Review Act (SEQRA), an Agricultural Data Statement, and the payment of application fees, as established by Resolution of the Town Board.

Refer to the Town Zoning Law for additional information and Site Plan Review criteria and process.

PART A: PROJECT DESCRIPTION

Provide all information requested to assure a clear understanding of the proposed project. Attach supplemental information if necessary. Incomplete information may render the application incomplete.

1. Applicant(s) name, address, and telephone number:

_____
_____
_____

2. Owner(s) name, address, and telephone number, if not the same as applicant:

_____
_____
_____

3. Describe the proposed use of the site:

_____
_____
_____

4. Project Description: (Refer to sample Site Plan Drawing) Include photographs, if applicable.

_____
_____
_____

5. Site location: _____

_____

6. **Total site area (square feet or acres): _____**

7. **Tax Map Section _____ Block _____ Lot _____**

8. **Zoning District property is located in: _____**

9. **List below Town, school, county, state, and federal permits/agreements i.e., road access, Department of Health, NYS Uniform Fire & Building Code, D.E.C.,PILOTS.**

   _____
   _____
   _____

10. **Attach a copy of the above-listed permits/agreements.**

11. **Describe infrastructure anticipated: (For example, water, sewer, power, roads.)**

    _____
    _____
    _____

12. **Anticipated construction schedule: _____**
    _____

13. **Current land use and condition of the project site (agricultural, commercial, undeveloped, residential, etc.):**
    _____
    _____
    _____

14. **Character of surrounding area (residential, agricultural, wetlands, etc.):**

    _____
    _____
    _____

15. **Anticipated number of residents, employees, shoppers, as is applicable:**

    _____

16. **Other project information necessary to adequately describe the project and inform the Zoning Enforcement Officer, Zoning Board of Appeals, and Planning Board:**
    _____
    _____
    _____

_____

Applicant Signature Owner Signature Date

PART B. - SITE PLAN REVIEW DRAWING

The intent of the site plan review drawing is to show the layout and design of the project on the site. At the pre-submission conference, the Planning Board may require that any or all of the following items be included on the site plan drawings. If no pre-submission conference is held, all of the following items are required on the site plan. Attach supplemental information if necessary.

1. Name of project, name and address of applicant and person responsible for preparing the site plan drawing.

2. Date, North point, written and graphic scale.

3. Boundaries of the project site drawn to scale, including distances, bearings, and areas.

4. Project Tax Map #Section, Block, Lot .

5. Location and ownership of all adjacent lands as shown on the latest tax records.

6. Location, name, width, and right-of-way of adjacent roads.

7. Location, width, and purpose of all existing and proposed easements, setbacks, reservations, and areas dedicated to public use.

8. Location, size, and design of the following:
    a. Existing and proposed structure(s)
    b. Driveways and parking areas
    c. Outdoor storage areas
    d. Sidewalks or pedestrian paths
    e. Drainage, sewage, and water facilities
    f. Sign
    g. Outdoor lighting
    h. Landscaping or screening
    i. Snow storage areas
    j. Lot exclusion area
    k. Vegetative buffers, screening and/or fencing.

9. Plans for controlling soil erosion and sedimentation during development.

10. Plans for grading and drainage showing existing and proposed contours of five-foot intervals.

11. Percentage of open space.

12. Designation of the amount of gross floor area and gross leasable area proposed for each non-residential use.

13. Other elements integral to the proposed development as considered necessary by the Planning Board.

Appendix No 11
Illustrative Site Development Plan
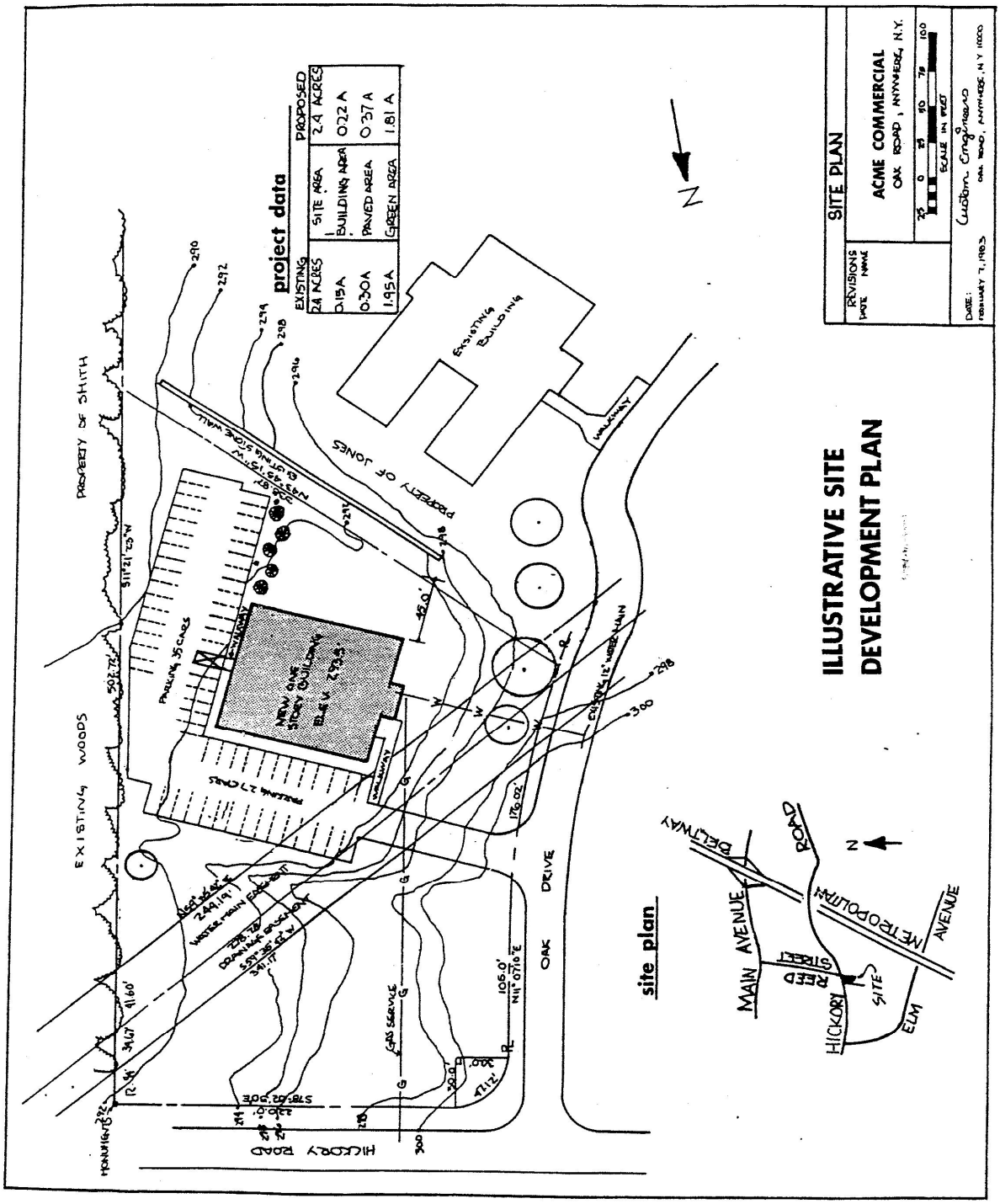
Figure 3